Extraflame®

Riscaldamento a Pellet

UK

THERMO PRODUCTS USER MANUAL

EVELYNE IDRO

MADE IN ITALY
design & production

004277424 - REV 002

⚠ ATTENTION

SURFACES CAN BECOME VERY HOT!
ALWAYS USE PROTECTIVE GLOVES!

During combustion, thermal energy is released that significantly increases the heat of surfaces, doors, handles, controls, glass, exhaust pipes, and even the front of the appliance. Avoid contact with those elements if not wearing protective clothing (protective gloves included). Make sure children are aware of the danger and keep them away from the stove during operation.

ENGLISH **5**

WARNINGS **5**
SAFETY **5**
ROUTINE MAINTENANCE **7**
HYDRAULIC SYSTEM **8**
INSTALLATION AND SAFETY DEVICES 8
ANTI-CONDENSATION DEVICE (MANDATORY) **9**
EVELYNE IDRO DETAILS **10**
CHARACTERISTICS **11**
CHECKS AND MEASURES FOR THE FIRST IGNITION **11**
THE PELLET FEEDING MOTOR DOES NOT WORK: 11
BULB THERMOSTATS - REARM 11
STOVE POSITIONING **12**
NOTES FOR CORRECT OPERATION **12**
REARM 12
FUSE 12
HERMETIC INSTALLATION **13**
COMBUSTION AIR 13
FUMES EXHAUST SYSTEM 13
INSTALLATION **14**
MINIMUM DISTANCES 14
PREPARATIONS FOR MAINTENANCE 14
RADIO/EMERGENCY CARD **16**
PELLETS AND FEEDING **17**
PELLET TANK - PRESSURE CLOSURE. **17**
LCD HANDHELD REMOTE **18**
CONFIGURATION 18
BATTERY TYPE AND REPLACEMENT 18
HANDHELD DEVICE FEATURES **19**
DISPLAY **20**
GENERAL MENU **21**
BASIC INSTRUCTIONS 21
COMMISSIONING SETTINGS **22**
DATE AND TIME 22
LANGUAGE 22
SET DEGREES 22
OPERATION AND LOGIC **23**
SET **24**
POWER 24
ROOM TEMPERATURE 24
H2O TEMPERATURE 24
VENTILATION 24
EASY SETUP 24
SET CHRONO 25
ENABLE CHRONO 25
PRG 1-4 25
SETTINGS **26**
DISPLAY 26
STAND-BY 26
FIRST LOAD 26
OUTLET AIR 26
RESET 26
ADDITIONAL FUNCTIONS **27**
AUX 27
LCD HANDHELD REMOTE ROOM PROBE CALIBRATION 27
ADDITIONAL THERMOSTAT 27
ADDITIONAL THERMOSTAT INSTALLATION 27
CLEANING AND MAINTENANCE **28**
MAINTENANCE **28**
PERIODIC CLEANING BY THE USER 28
BURN POT DETAIL 30
ROUTINE MAINTENANCE PERFORMED BY ENABLED TECHNICIANS **31**
DECOMMISSIONING (END OF SEASON) 31
DISPLAYS **33**
ALARMS **33**
GUARANTEE TERMS **35**
DISPOSAL **36**

ATTENZIONE TASSATIVO
PRIMA DI MOVIMENTARE LA STUFA TOGLIERE LE MAIOLICHE INDICATE PER EVITARE DANNI.

ATTENTION - COMPULSORY
BEFORE MOVING THE STOVE, KINDLY TAKE THE CERAMICS OFF IN ORDER TO AVOID ANY DAMAGES

ATTENTION - OBLIGATOIRE
AVANT DE BOUGER LE POÊLE , FAIRE ATTENTION À LEVER LES CÉRAMIQUES INDIQUÉES POUR ÉVITER DES DÉGÂTS

VORSICHT - OBLIGATORISCH
BEVOR SIE DEN OFEN BEWEGEN , BITTE UNBEDINGT DIE BEZEICHNETE KERAMIK KACHELN ENTFERNEN UM SCHÄDEN ZU VERMEIDEN

ATENCIÓN - PERENTORIO
ANTES DE MOVER LA ESTUFA SACAR LAS MAYÓLICAS INDICADAS PARA EVITAR DAÑOS.

UWAGA - OBOWIĄZEK
PRZED PRZYSTĄPIENIEM DO PRZEMIESZCZANIA PIECA ZDJĄĆ WSKAZANE MAJOLIKI ABY UNIKNĄĆ USZKODZENIA.

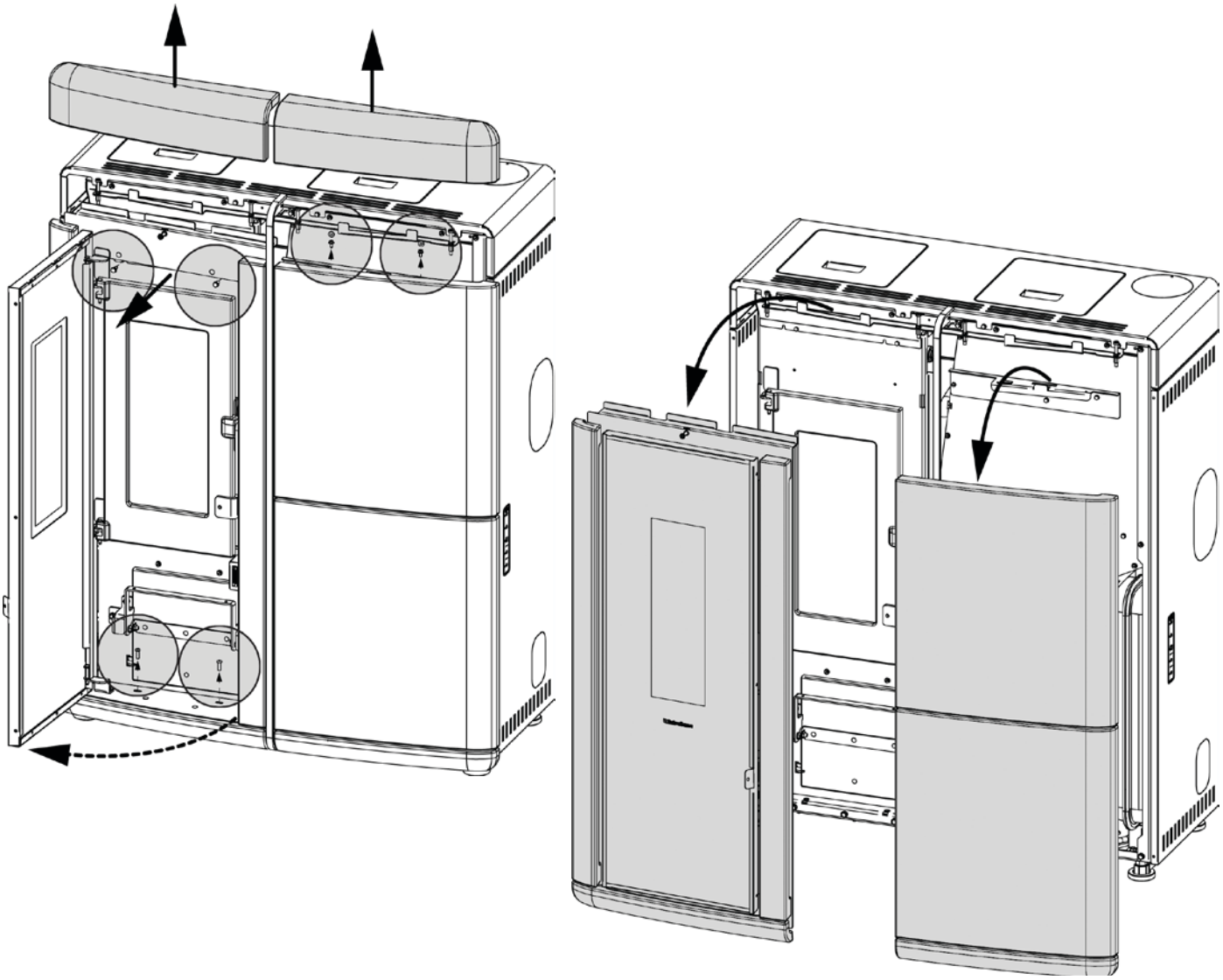

We thank you for having chosen our company; our product is a great heating solution developed from the most advanced technology with top quality machining and modern design, aimed at making you enjoy the fantastic sensation that the heat of a flame gives, in complete safety.

WARNINGS

This instructions manual is an integral part of the product: make sure that it always accompanies the appliance, even if transferred to another owner or user, or if transferred to another place. If it is damaged or lost, request another copy from the area technician. This product is intended for the use for which it has been expressly designed. The manufacturer is exempt from any liability, contractual and extracontractual, for injury/damage caused to persons/animals and objects, due to installation, adjustment and maintenance errors and improper use.
Installation must be performed by qualified staff, which assumes complete responsibility for the definitive installation and consequent good functioning of the product installed. One must also bear in mind all laws and national, regional, provincial and town council Standards present in the country in which the appliance has been installed, as well as the instructions contained in this manual.
The Manufacturer cannot be held responsible for the failure to comply with such precautions.
After removing the packaging, ensure that the content is intact and complete. Otherwise, contact the dealer where the appliance was purchased.
All electric components that make up the product must be replaced with original spare parts exclusively by an authorised after-sales centre, thus guaranteeing correct functioning.

SAFETY

- **THE APPLIANCE MAY BE USED BY CHILDREN 8 YEARS OF AGE OR OLDER AND INDIVIDUALS WITH REDUCED PHYSICAL, SENSORY, OR MENTAL CAPACITIES OR WITHOUT EXPERIENCE OR THE NECESSARY KNOWLEDGE, PROVIDED THAT THEY ARE SUPERVISED OR HAVE RECEIVED INSTRUCTIONS ON SAFE USE OF THE APPLIANCE AND THAT THEY UNDERSTAND THE INHERENT DANGERS.**
- **THE GENERATOR MUST NOT BE USED BY PERSONS (INCLUDING**

CHILDREN) WITH REDUCED PHYSICAL, SENSORY AND MENTAL CAPACITIES OR WHO ARE UNSKILLED PERSONS, UNLESS THEY ARE SUPERVISED AND TRAINED REGARDING USE OF THE APPLIANCE BY A PERSON RESPONSIBLE FOR THEIR SAFETY.

- THE CLEANING AND MAINTENANCE REQUIRED BY THE USER MUST NOT BE PERFORMED BY CHILDREN WITHOUT SUPERVISION.
- CHILDREN MUST BE CHECKED TO ENSURE THAT THEY DO NOT PLAY WITH THE APPLIANCE.
- DO NOT TOUCH THE GENERATOR WHEN YOU ARE BAREFOOT OR WHEN PARTS OF THE BODY ARE WET OR DAMP.
- THE SAFETY AND ADJUSTMENT DEVICES MUST NOT BE MODIFIED WITHOUT THE AUTHORISATION OR INDICATIONS OF THE MANUFACTURER.
- DO NOT PULL, REMOVE, TWIST THE ELECTRICAL CABLES COMING OUT OF THE PRODUCT EVEN IF IT IS DISCONNECTED FROM THE MAINS.
- IT IS ADVISED TO POSITION THE POWER SUPPLY CABLE SO THAT IT DOES NOT COME INTO CONTACT WITH HOT PARTS OF THE APPLIANCE.
- THE POWER SUPPLY PLUG MUST BE ACCESSIBLE AFTER INSTALLATION.
- DO NOT CLOSE OR REDUCE THE DIMENSIONS OF THE AIRING VENTS IN THE PLACE OF INSTALLATION. THE AIRING VENTS ARE ESSENTIAL FOR CORRECT COMBUSTION.
- DO NOT LEAVE THE PACKAGING ELEMENTS WITHIN REACH OF CHILDREN OR UNASSISTED DISABLED PERSONS.
- THE HEARTH DOOR MUST ALWAYS BE CLOSED DURING NORMAL FUNCTIONING OF THE PRODUCT.
- WHEN THE APPLIANCE IS FUNCTIONING AND HOT TO THE TOUCH, ESPECIALLY ALL EXTERNAL SURFACES, ATTENTION MUST BE PAID
- CHECK FOR THE PRESENCE OF ANY OBSTRUCTIONS BEFORE SWITCHING THE APPLIANCE ON FOLLOWING A PROLONGED PERIOD OF INACTIVITY.
- THE GENERATOR HAS BEEN DESIGNED TO FUNCTION IN ANY CLIMATIC CONDITION. IN PARTICULARLY ADVERSE CONDITIONS (STRONG WIND, FREEZING) SAFETY SYSTEMS MAY INTERVENE THAT SWITCH THE GENERATOR OFF. IF THIS OCCURS, CONTACT THE TECHNICAL AFTER-SALES SERVICE AND ALWAYS DISABLE THE SAFETY

SYSTEMS.

- **IN THE EVENT THE FLUE CATCHES FIRE, USE SUITABLE SYSTEMS FOR SUFFOCATING THE FLAMES OR REQUEST HELP FROM THE FIRE BRIGADE.**
- **THIS APPLIANCE MUST NOT BE USED TO BURN WASTE**
- **DO NOT USE ANY FLAMMABLE LIQUIDS FOR IGNITION**
- **DURING THE FILLING PHASE DO NOT PUT THE BAG OF PELLETS TO INTO CONTACT WITH THE PRODUCT**
- **THE MAJOLICAS ARE TOP QUALITY ARTISAN PRODUCTS AND AS SUCH CAN HAVE MICRO-DOTS, CRACKLES AND CHROMATIC IMPERFECTIONS. THESE FEATURES HIGHLIGHT THEIR VALUABLE NATURE. DUE TO THEIR DIFFERENT DILATION COEFFICIENT, THEY PRODUCE CRACKLING, WHICH DEMONSTRATE THEIR EFFECTIVE AUTHENTICITY. TO CLEAN THE MAJOLICAS, IT IS RECOMMENDED TO USE A SOFT, DRY CLOTH. IF A DETERGENT OR LIQUID IS USED, THE LATTER COULD PENETRATE INSIDE THE CRACKLES, HIGHLIGHTING THEM.**
- **SINCE THE PRODUCT CAN TURN ON AUTOMATICALLY THANKS TO THE TIMER, OR REMOTELY USING THE DEDICATED APPLICATIONS, IT IS STRICTLY FORBIDDEN TO LEAVE ANY COMBUSTIBLE OBJECT WITHIN THE SAFETY DISTANCES INDICATED ON THE TECHNICAL DATA PLATE.**

ROUTINE MAINTENANCE

Based on Decree 22 January 2008 n°37 art.2, routine maintenance means interventions aimed at reducing degradation due to normal use, as well as dealing with accidental events entailing the need of first interventions, which however do not modify the structure of the system upon which one is intervening or its intended use according to the requirements laid down by the technical standards in force and by the manufacturer's use and maintenance manual.

HYDRAULIC SYSTEM

Certain concepts referring to the Italian Standard UNI 10412-2 (2009) are described in this chapter.
As previously described, when installing, all national, regional, provincial and council Standards in force provided by the country in which the appliance has been installed must be complied with.
During installation of the generator it is MANDATORY to adjust the system with a manometer in order to display the water pressure.

TABLE OF SAFETY DEVICES FOR CLOSED VESSEL SYSTEM AND NOT PRESENT IN THE PRODUCT	
Safety valve	✓
Pump control thermostat (it is managed by the water probe and the board program)	✓
Water temperature indicator (display)	✓
Pressure transducer with display	✓
Automatic circuit breaker adjustment switch (managed by board program)	✓
Pressure transducer with minimum and maximum pressure switch alarm	✓
Water overheating automatic circuit breaker switch (block thermostat)	✓
Circulation system (pump)	✓
Expansion system	✓

Pay attention to the correct sizing of the system:

- generator power compared to the thermal requirement
- possible need for a buffer tank

INSTALLATION AND SAFETY DEVICES

The installation, relative system connections, commissioning and inspection of correct functioning must be carried out perfectly, in full compliance with Standards in force, national, regional and municipal, as well as these instructions. For Italy, installation must be carried out by professionally qualified staff (Ministerial Decree dated 22.01.08 n°37).
Extraflame S.p.A. declines all responsibility for damage to objects and/or persons caused by the system.

TYPE OF SYSTEM

- There are 2 different types of system:
- Open vessel system and closed vessel system.
- The product has been designed and made to work with closed vessel systems.

CHECK THAT THE PRELOAD OF THE EXPANSION VESSEL IS SET TO 1.5 BAR.

SAFETY DEVICES FOR CLOSED VESSEL SYSTEM

In accordance with the UNI 10412-2 (2009) regulation in force in Italy, all the closed systems must be fitted with: safety valve, pump control thermostat, temperature indicator, pressure indicator, automatic circuit breaker block switch (block thermostat), circulation system, expansion system, and safety dissipation built-in to the generator with thermal safety valve (self-activated), if the appliance does not have a temperature self-adjustment system.

DISTANCES OF SAFETY DEVICES ACCORDING TO THE STANDARD

The temperature safety sensors must be in place on the machine at a distance no greater than 30 cm from the flow connection. Whenever the generators lack a device, those missing can be installed on the generator flow pipe, within a distance no greater than 1 m from the machine.

COMMISSIONING CHECKS

Before connecting the boiler:
a) wash all system piping thoroughly in order to remove any residues which might compromise the correct functioning of certain system components (pumps, valves, etc.).
b) The company recommends installing a magnetic filter in the generator return, to increase the operational life of the boiler, make it easier to remove impurities and increase the overall efficiency of the system.
It is also advisable to perform an inspection using appropriate instruments, to check for any stray currents that may cause corrosion.
c) check to verify that the flue has adequate draught, that it is not narrowed and that other appliances do not discharge into the flue. This is to prevent unexpected power increases. The flue fitting can be mounted between the boiler and the flue only after this inspection. An inspection of the connections with pre-existing flues is recommended.

ANTI-CONDENSATION DEVICE (MANDATORY)

Make sure a suitable anti-condensate circuit has been realised, which guarantees an appliance return temperature of at least 55°C. The automatic thermostatic valve, for instance, is used in solid fuel boilers as it prevents cold water from returning into the exchanger. A high return temperature allows efficiency improvement, reduces formation of smoke condensation and prolongs the generator's life span. The manufacturer recommends using the 55°C model with 1" hydraulic connections.

For the products with the *PWM pump control thermostat, installation is considered equivalent to the realisation of a suitable anti-condensate circuit in the case where::
- the heat generator pump is the only one in the installation, or
- there is a plate heat exchanger between the heat generator and the installation, or
- there is a hydraulic compensator or an inertial storage tank (buffer) between the heat generator and the installation

***Check technical data sheet on website.**
Valve on sale as an accessory (optional)

EVELYNE IDRO DETAILS

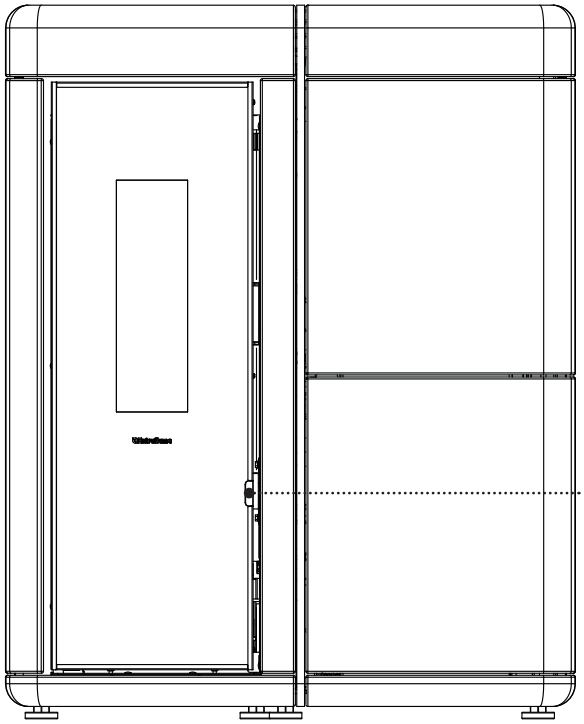

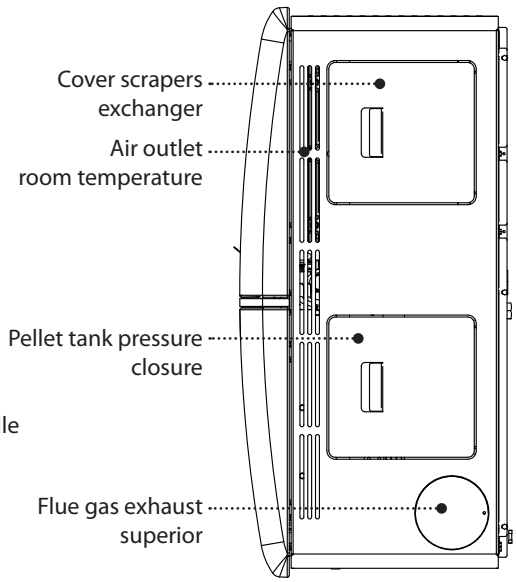

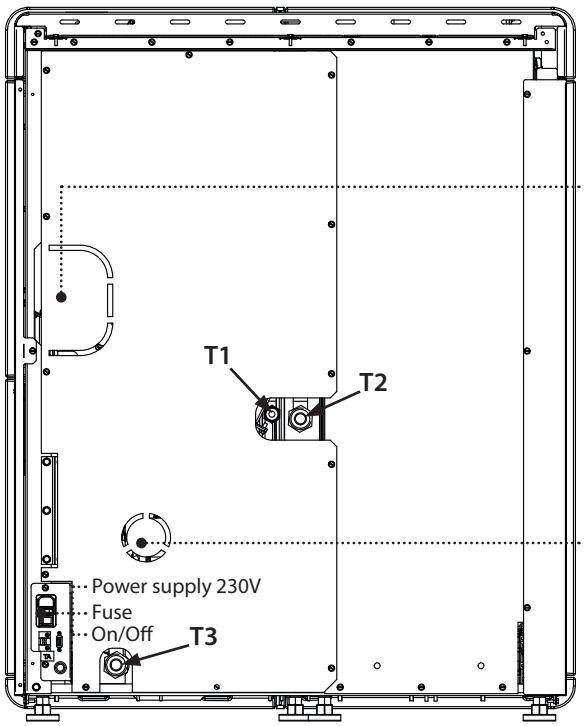

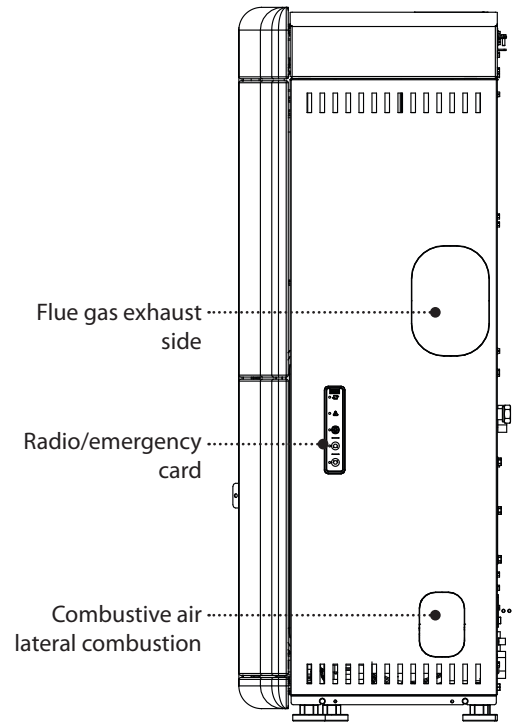

HYDRAULIC INSTALLATION	
T1	3 bar safety drain
T2	Boiler flow/output
T3	Boiler return/inlet

CHARACTERISTICS	
Water content of the thermo-product heat exchanger (l)	18
Volume of expansion vessel integrated into the thermo-product (l)	*8
3 bar safety valve integrated into the thermo-product	YES
Minimum and maximum pressure switch integrated into the thermo-product	YES
PWM Pump integrated into the thermo-product	YES
Pump max. head (m)	6

* **PROVIDE FOR POSSIBLE SUPPLEMENTARY EXPANSION TANK BASED ON THE WATER CONTENT OF THE SYSTEM.**

The diagram at the side illustrates the behaviour of the pump used in our thermo-products at the speeds that can be set.

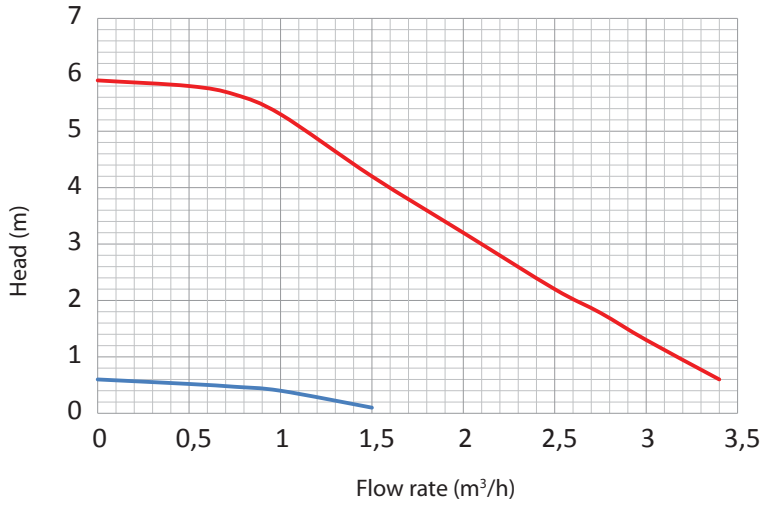

CHECKS AND MEASURES FOR THE FIRST IGNITION

CAUTION!
FOR THE CORRECT OPERATION OF THE GENERATOR, THE HYDRAULIC SYSTEM PRESSURE MUST BE BETWEEN 0.6 AND 2.5 BAR.

If the pressure detected by the digital pressure gauge is less than 0.6 or greater than 2.5 bar, it sets off the boiler alarm.
Bringing the pressure of the water within standard values, it is possible to reset the alarm by pressing the ⏻/1 button for 3 seconds
(The alarm can be reset only if the fumes motor is stopped and when 15 minutes have elapsed from the alarm shown on the display)

THE PELLET FEEDING MOTOR DOES NOT WORK:

Due to the filling of the system it is normal that there is air inside the circuit.
At the 1st ignition cycle, the movement of the water causes a displacement of the air bubbles and their release from automatic air vents automatic of the system This can cause the pressure to decrease and the intervention of the minimum setting of the pressure gauge, which interrupts the operation of the pellet conveying motor and therefore the operation of the heat generator.

The system must be vented, even several times to purge air and loaded whenever the pressure is too low.
It is not a fault, but a normal phenomenon due to its filling. The plumber must always fully vent the system subsequently to the filling by using the appropriate vents in the circuit and by making the machine execute the "air venting" function. (After the first ignition and when the machine is cold, once again activate the "air discharge" function. - see "*SETTINGS*" chapter)

BULB THERMOSTATS - REARM

Check by pressing rearm (100°C), before contacting a technician (see REARM chapter).

STOVE POSITIONING

For correct product functioning, it is recommended to position it in a way that it is perfectly level, with the aid of a spirit level.

NOTES FOR CORRECT OPERATION

For correct operation of the pellet stove, one must comply with the following indications:

During the operation of the stove, the pellet tank cover must always remain closed.
The lack of one of the above-described conditions during operation will cause the display to show:

"CLOSE HOPPER- STOVE DOOR"

This warning indicates that 60" minutes are allowed for closing the door and the pellet cover.

Otherwise, during the ignition phase the stove will go into alarm "**DEPRESSION ALARM**" while during normal operation the stove will be brought to "**COOLING WAIT**" to then restart automatically when the conditions have been reached (cooled stove, etc...).

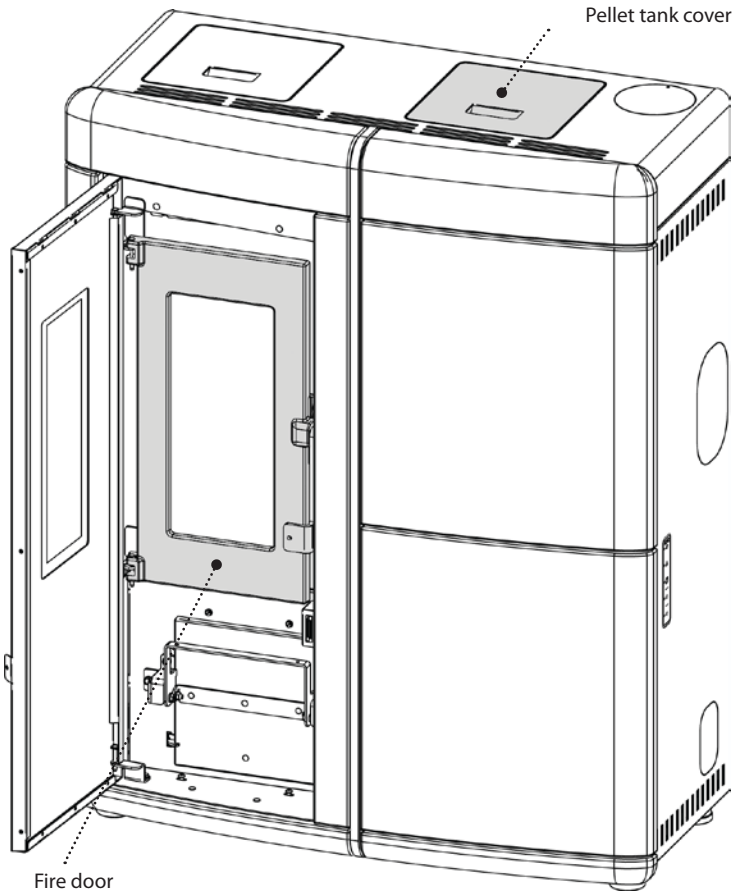

REARM

In the figure below is shown the rearm position (100°C). It is recommended to contact the qualified technicianif one of the rearms should be triggered, so as to verify the cause.

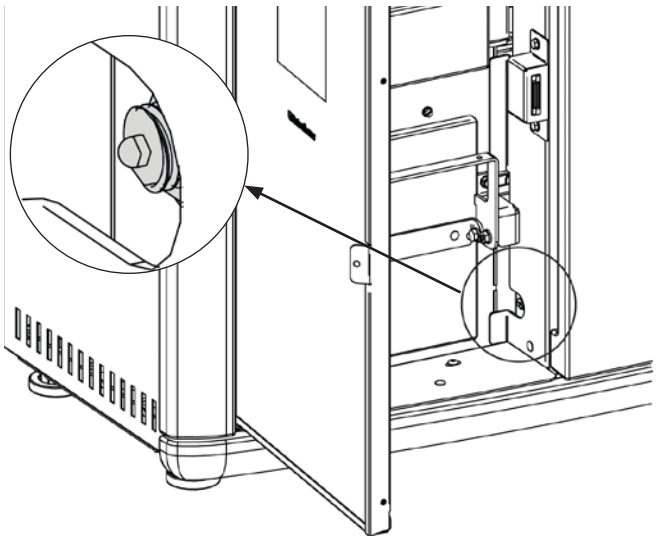

FUSE

If there is no power supply to the stove, check the state of the fuse located in the box between the stove switch and the power cable connection.

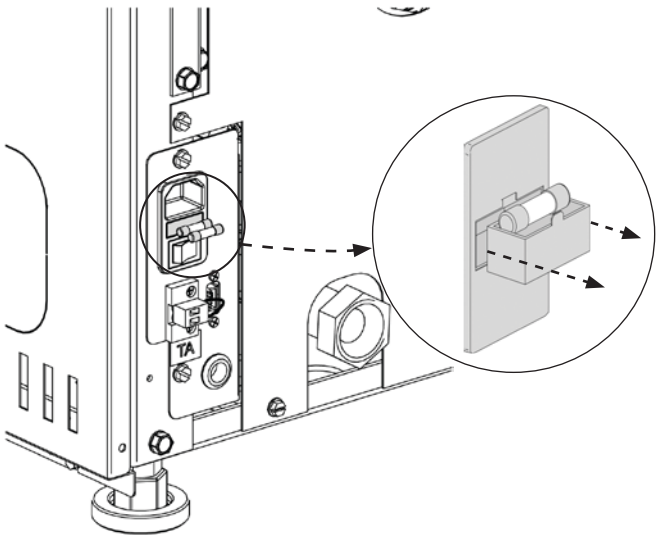

HERMETIC INSTALLATION

Evelyne Idro is a completely sealed product with respect to the installation environment, which makes it ideal for passive houses, as it does not take air from inside the homes.

COMBUSTION AIR

To respect the air-tight seal of the stove, the combustion air connection pipe must be directly connected to the outside using specific sealed fittings and pipes.

FUMES EXHAUST SYSTEM

- If the generator has a fume temperature below 160°C+ (ambient temperature due to high efficiency, see technical data), the fumes exhaust system must be resistant to humidity.
- Should there be a possibility of the fumes condensating, provide an inspection "T" outside the stove.

INSTALLATION EXAMPLE

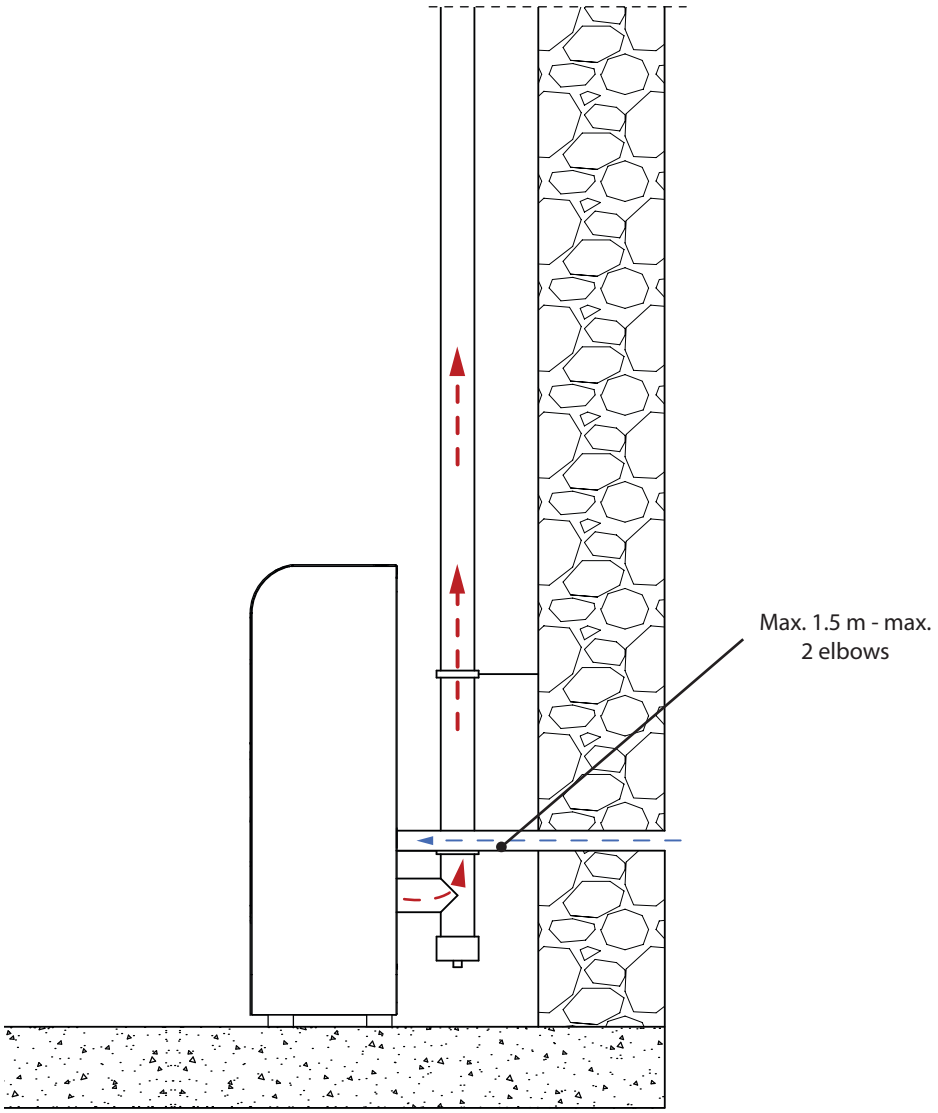

One must also bear in mind all laws and national, regional, provincial and town council regulations in force in the country in which the appliance has been installed, as well as the instructions contained in this manual.

INSTALLATION

GENERAL

The flue gas exhaust and hydraulic connections must be carried out by qualified personnel who must issue installation conformity documentation compliant with national standards.
The installer must provide the owner or person acting for him, according to the legislation in force, with the declaration of conformity, supplied with:

1) the use and maintenance manual of the appliance and of the system components (such as for example, the smoke ducts, chimney, etc.);
2) photocopy or photograph of the chimney plaque;
3) system booklet (where applicable).

The installer must ask to be issued with a receipt stating that the documentation has been provided, and must keep it with a copy of the technical documentation relating to the installation.
For installation in a condominium, prior approval from the condominium's administrator must be requested.
Where required, check the exhaust gas emissions after installation. Should a sampling point be installed, it must be airtight.

COMPATIBILITY

Do not install in rooms with a fire hazard. It is also forbidden to install it in living areas with the following characteristics:

1. where there are liquid fuel appliances with continuous or discontinuous operation that draw the combustion air into the room in which they are installed.
2. where there are type B gas appliances intended for heating, with or without domestic hot water production and in adjacent and communicating rooms.
3. where the depression measured in situ between the external and internal environment is greater than 4 Pa.

N.B.: Watertight appliances can also be installed in the cases indicated in points 1, 2 and 3 of this paragraph.

INSTALLATIONS IN BATHROOMS, BEDROOMS AND STUDIO FLATS

Installation in bathrooms, bedrooms and studio flats is only allowed for sealed or closed hearth appliances with ducted combustion air taken from the outside.

POSITIONING AND SAFETY DISTANCES

The support surfaces and/or points must have a suitable capacity to bear the overall weight of the appliance, accessories and coverings. If the floor is made of a combustible material, we recommend using a non-combustible material to protect the front part from any burnt material which might fall during routine cleaning operations. The generator must be level to function properly. The side walls, the rear walls and the floor support surface should be made of non-combustible material.

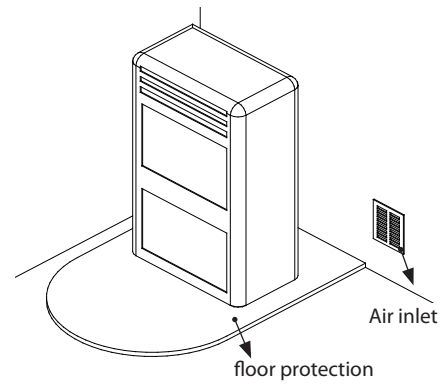

One must also bear in mind all laws and national, regional, provincial and town council regulations in force in the country in which the appliance has been installed, as well as the instructions contained in this manual.

MINIMUM DISTANCES

Installation next to flammable or heat-sensitive materials is permitted **only if the special safety distances specified on the label at the beginning of the manual (pag.2) are observed**. If the materials are not flammable, you must keep a side and rear distance of at least 100 mm (without the inserts). For products equipped with rear spacers, wall-mounting installation is permitted exclusively for the rear side.

PREPARATIONS FOR MAINTENANCE

To carry out extraordinary maintenance operations on the product, it may be necessary to move it away from the adjacent walls. This must be done by a technician authorised to disconnect the combustion product evacuation ducts and then reconnect them. For heaters connected to the hydraulic system, the connection between the system itself and the product must be made in such a way that, when an authorised technician is about to carry out extraordinary maintenance operations, it is possible to move the heater at least 1 metre away from the adjacent walls.

INSTALLING INSERTS

When installing inserts, access must be prevented to the internal parts of the appliance and it must not be possible to access live parts during extraction operations.
Any wiring, for example the power cable or room probe, must be positioned so as not to be damaged during movement of the insert and must not come into contact with hot parts. If a cavity made of combustible material is installed, we recommend taking all the safety precautions indicated by the installation standards.

VENTILATION AND AERATION OF INSTALLATION ROOMS

Ventilation in the event of a non-hermetic generator and/or of non-sealed installation must take place respecting the minimum area indicated below:

Appliance categories	Reference standard	Percentage of the net opening section with respect to the appliance fumes outlet section	Minimum net opening value of the ventilation duct
Pellet stoves	UNI EN 14785	-	80 cm²
Boilers	UNI EN 303-5	50%	100 cm²

Under any condition, including in the presence of extractor hoods and/or of controlled forced ventilation systems, the pressure difference between the generator installation rooms and the outside must always be equal to or less than 4 Pa.

In the presence of type B gas appliances with intermittent operation not intended for heating, they must have their own aeration and/or ventilation opening.

The air inlets must meet the following requirements:
- they must be protected with grids, metal mesh, etc., but without reducing the net useful section;
- they must be made so as to make the maintenance operations possible;
- positioned so that they cannot be obstructed;

The clean and non-contaminated air flow can also be obtained from a room adjacent to that of installation (indirect aeration and ventilation), as long as the flow takes place freely through permanent openings communicating with the outside.
The adjacent room cannot be used as a garage, or to store combustible material or for any other activity with a fire hazard, bathroom, bedroom or common room of the building.

FLUE GAS EXHAUST

The heat generator works in depression and is equipped with an outlet fan for flue gas extraction. There must be a single exhaust system for the generator. Using a flue that is shared with other devices is not allowed.

The components of the flue gas exhaust system must be chosen in relation to the type of appliance to be installed in compliance with:
- UNI/ TS 11278 in the event of metal chimneys, with particular attention to that stated in the specification;
- UNI EN 13063-1 and UNI EN 13063-2, UNI EN 1457, UNI EN 1806 in the event of non-metallic chimneys.
- The length of the horizontal section must be minimal and, in any case, no longer than 3 metres, with a minimum upward slope of 3%
- There must not be more than 4 direction changes including the one due to the use of the "T" element.
- A "T" fitting with a condensation collection cap must be provided at the base of the vertical section.
- If the exhaust is not inserted in an existing flue, a vertical section with a windproof end piece is required (UNI 10683).
- The vertical duct can be inside or outside the building. If the smoke duct is inserted in an existing flue, it must be certified for solid fuel.
- If the smoke duct is outside the building, it must always be insulated.
- The smoke ducts must have at least one airtight inlet for flue gas sampling.
- All the sections of the flue gas duct must be accessible to inspection.
- Inspection openings must be provided for cleaning.
- If the generator has a fume temperature lower than 160°C+ ambient temperature caused by the high yield (contact technicians) it MUST be resistant to humidity.
- A flue system that does not respect the previous points or, in general, that does not comply with the regulations, may cause condensation phenomena inside it.

CHIMNEY CAP

The chimney caps must meet the following requirements:
- they must have a useful outlet section no less than double that of the chimney/ducted system on which it is installed;
- they must be adapted in order to prevent the penetration of rain and snow in the chimney/ducted system;
- they must be built so that, in the event of winds coming from all directions and from any angle, the expulsion of combustion products is in any case ensured;

EXAMPLES OF CORRECT CONNECTION TO THE CHIMNEY

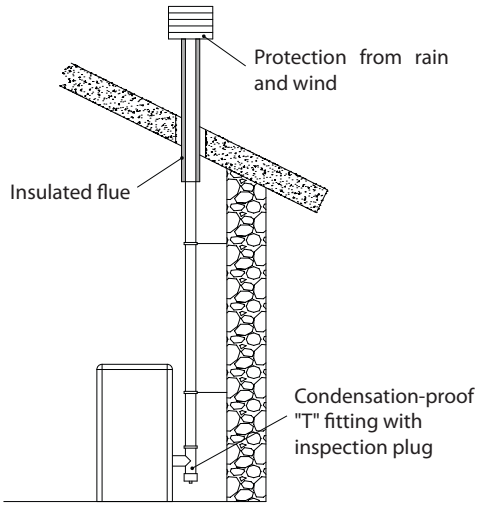

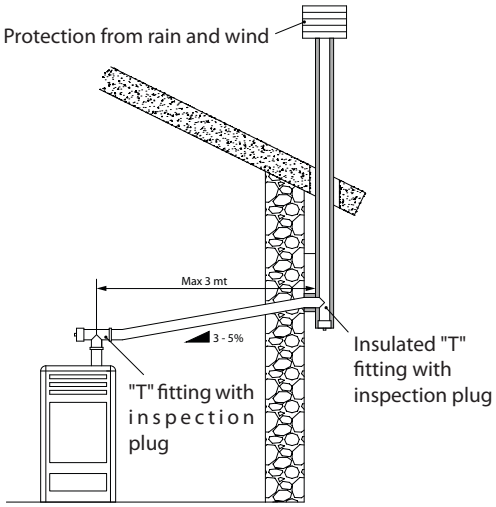

CONNECTION TO THE MAINS ELECTRIC SUPPLY
The generator is supplied with an electric power cable to be plugged into a 230V 50 Hz socket, possibly with a circuit breaker switch. The socket must be easily accessible.
The electrical system must be compliant with standards. The efficiency of the earthing circuit must be checked. Unsuitable earthing of the system can cause malfunctioning for which the manufacturer will not be held liable.
Power supply variations beyond 10% can cause faulty operation of the product.

RADIO/EMERGENCY CARD

The stove is fitted with an emergency radio card located in the side part, allowing the basic operation of the stove in the event the handheld device is damaged or malfunctions.

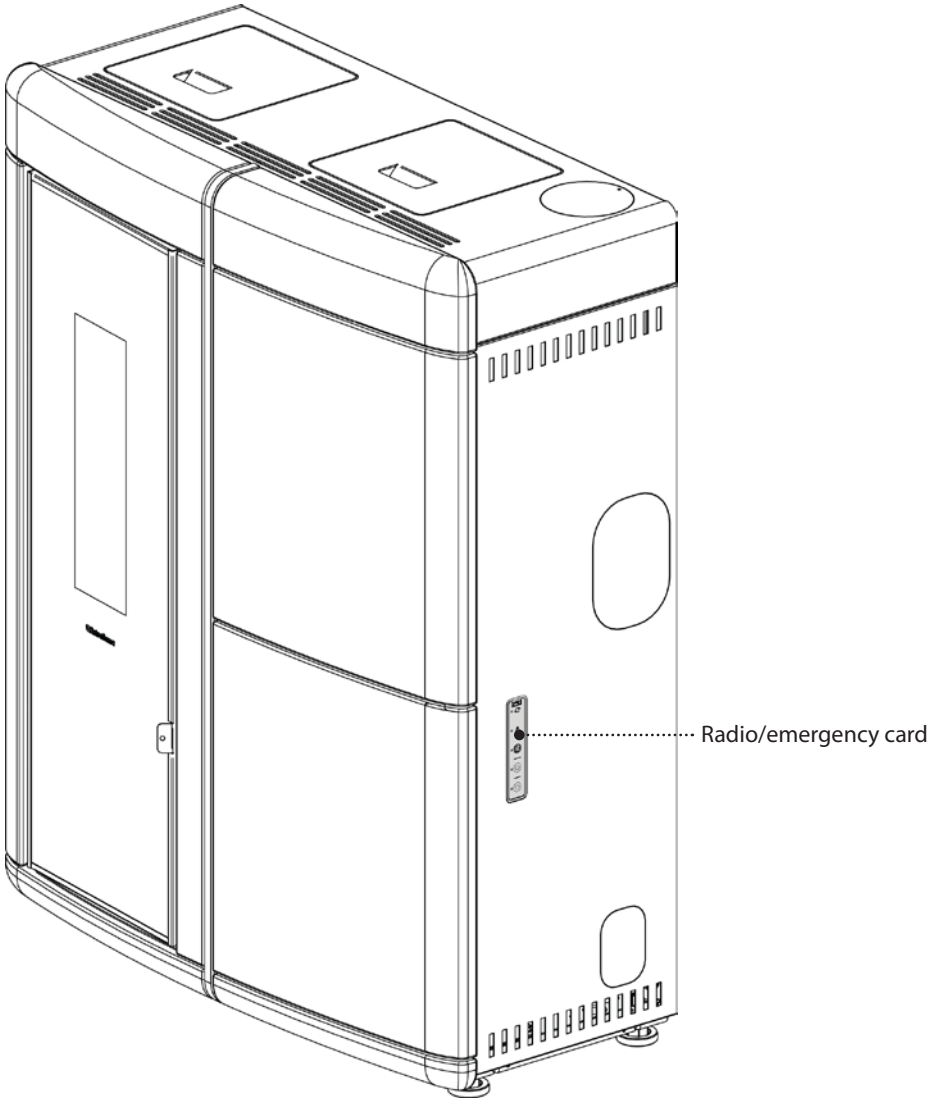

The functions that can be managed from the emergency card are:

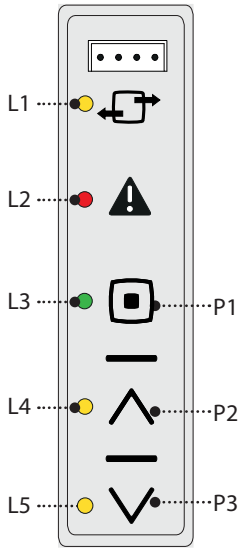

	-	-
L1 : Yellow led	Led off: radio communication not available. Led on: radio communication available.	-
L2 : Red led	Led off: normal operation. Led on: alarm present.	-
L3 : Green led	Led off: stove off. Led on: stove on. Flashing led: stove in cleaning phase.	P1: On/off stove.
L4 : Yellow led	Led on: stove operates at 5th power level.	P2: 5th power level setting.
L5 : Yellow led	Led on: stove operates at 1st power level.	P3: 1st power level setting.

PELLETS AND FEEDING

Pellets are made by subjecting wood shavings i.e. the rejects of pure wood (without paint) sawmill, carpenter products and products from other activities connected to working and transforming wood, to very high pressures.
This type of fuel is fully ecological as no glues are used to hold it together. In fact, the compactness of the pellets is guaranteed over time by a natural substance that is found in wood: wood coal.
As well as being an ecological fuel, as wood residues are made the most of, the pellet also has technical advantages.
While the wood has a calorific value of 4.4 kWh/kg. (with 15% humidity, then after about 18 months of seasoning), that of the pellet is 5 kWh/kg. Pellet density is about 650 kg/m^3 and water content is equal to 8% of its weight. For this reason the pellets do not need to be seasoned in order to obtain a sufficiently adequate heat yield.

The pellets used must comply with the characteristics described by the following standards:

EN PLUS class A1, ISO 17225-2 class A1
and
UNI EN 303-5 with the following characteristics: water content ≤ 12%, ash content ≤ 0.5% and lower calorific value >17 MJ/kg (in the case of boilers).

The manufacturer always recommended using pellets with a diameter of 6 mm with its products.

PELLET STORAGE

In order to ensure problem-free combustion pellets must be stored in a dry place.
Open the tank lid and load the pellets using a scoop.

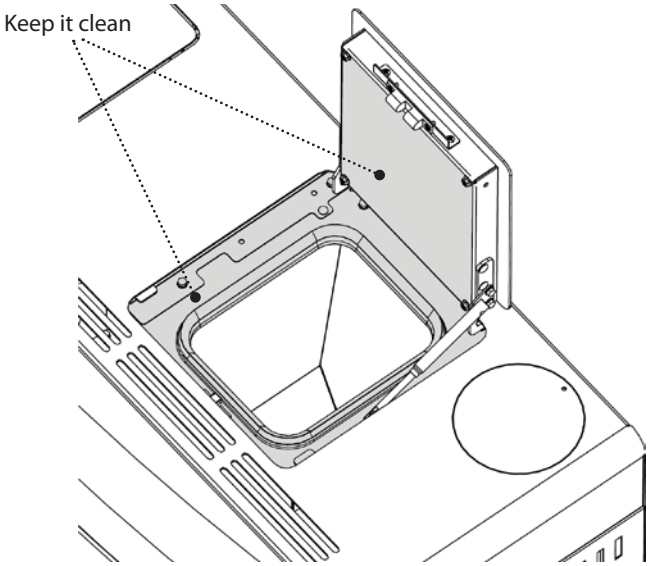

THE USE OF POOR QUALITY PELLETS OR ANY OTHER MATERIAL DAMAGES THE FUNCTIONS OF THE GENERATOR AND CAN VOID THE WARRANTY AND THE ANNEXED RESPONSIBILITY OF THE MANUFACTURER.

PELLET TANK - PRESSURE CLOSURE.

During the operation of the stove, the pellet tank cover must always remain closed.

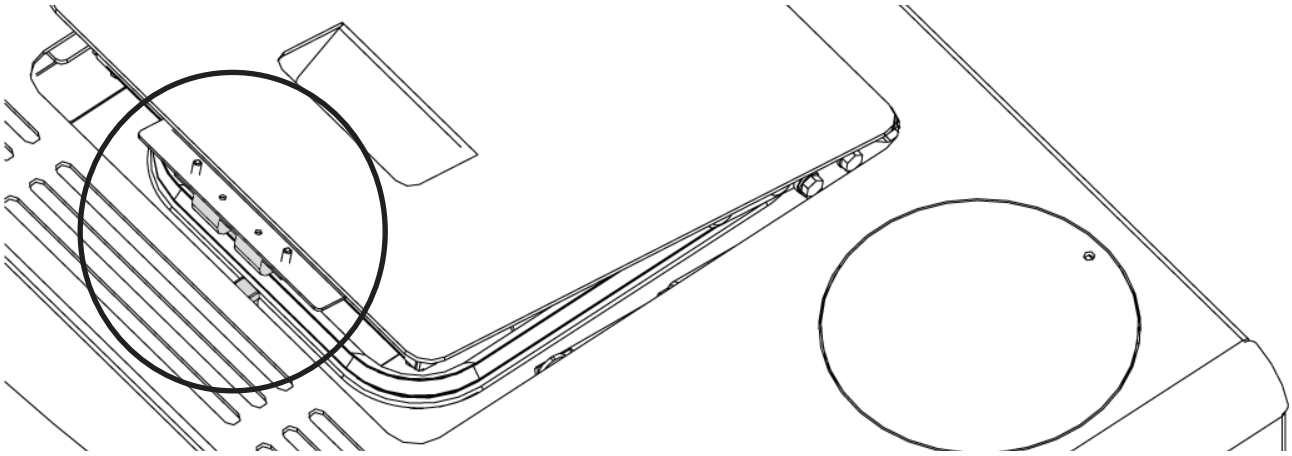

DO NOT PLACE THE BAG DIRECTLY ON THE STOVE TO LOAD THE TANK.
ALWAYS USE A SCOOP TO LOAD THE TANK. DO NOT RUB OR PLACE WEIGHTS ON THE TANK SEAL. KEEP THE TANK COVER SEAL SUPPORTING SURFACE CLEAN AT ALL TIMES. CHECK THE CONDITIONS OF THE SEAL FREQUENTLY. IF DAMAGED, CONTACT YOUR LOCAL AUTHORISED TECHNICIAN.

LCD HANDHELD REMOTE

CONFIGURATION

LCD HANDHELD REMOTE CODING PROCEDURE:

1. Disconnect the power supply to the stove.
2. Press the ▪ and **OK** keys at the same time until the UNIT selection screen appears.
3. Using the ^ and v keys, select the new UNIT.
4. Power the stove. Confirm the selected unit within 10 seconds (all LEDs flash on the radio/emergency card) by pressing the OK key on the handheld.
5. All LEDs on the radio/emergency card will remain on for 2 seconds to confirm the new configuration.
6. If the configuration was unsuccessful, the display will read "APPLIANCE NOT FOUND". In this case, repeat the procedure.

THE HANDHELD IS ALREADY CONFIGURED WITH "UNIT 0", IN THE EVENT THERE IS ANOTHER STOVE. TO AVOID INTERFERENCES, A NEW CONFIGURATION MUST BE PERFORMED, MODIFYING ONE OF THE TWO STOVES.

SOME RADIO FREQUENCY APPLIANCES (E.G. MOBILE PHONES, ETC...) MAY CAUSE INTERFERENCE WITH COMMUNICATION BETWEEN THE HANDHELD DEVICE AND THE STOVE.

BATTERY TYPE AND REPLACEMENT

To insert/replace the batteries, suffice it to remove the battery protection cover at the back of the handheld device (figure 1).
Insert the batteries in accordance with the symbols imprinted on the handheld device and on the battery itself.

Three AAA batteries are required for the handheld device to function.

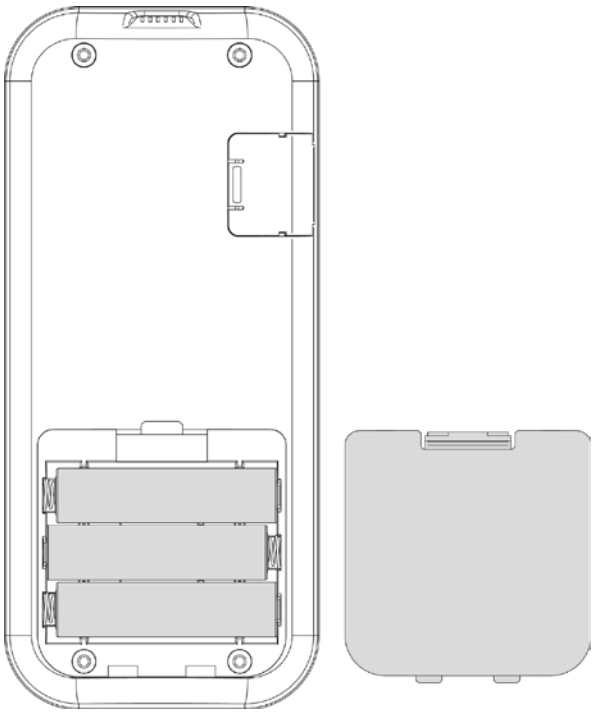

(figure 1)

Respect the environment!
Used batteries contain metals that are harmful to the environment, and therefore must be disposed of separately in special containers.

HANDHELD DEVICE FEATURES

The handheld device is fitted with an LCD backlit display. The display remains lit for 5 seconds. After a certain period of time, in order to minimise battery consumption, the display turns off (sleep mode).
It turns on again after pressing the ON/OFF key (6).

CAUTION!

- Do not place the handheld device in direct or indirect contact with water. The handheld device may not work properly in the presence of humidity or if exposed to water.

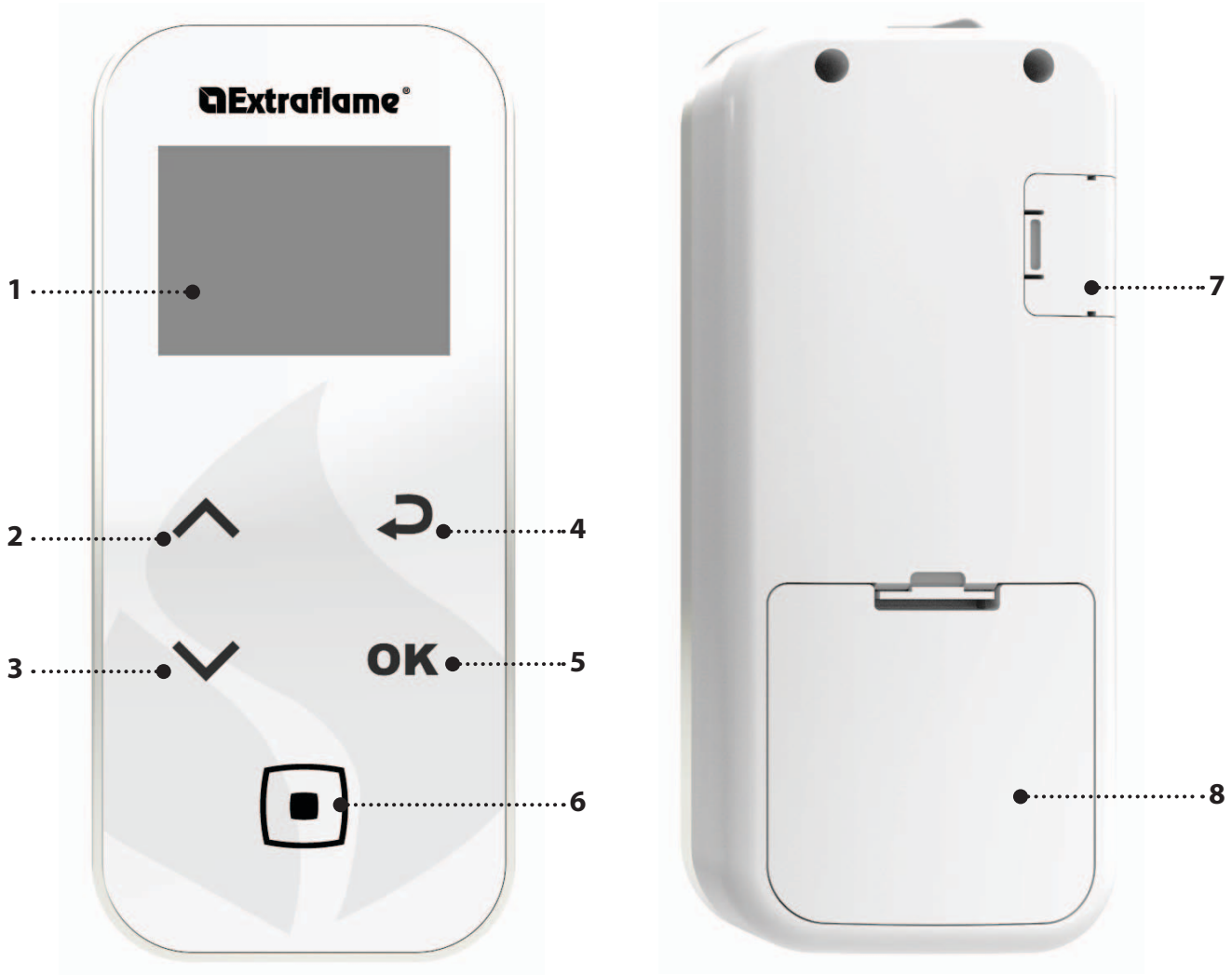

1.	Display
2.	Set power / scroll through the menus / increase - select a setting
3.	Set H2O / scroll through the menus / reduce - deselect a setting
4.	Back key
5.	Key to access MENU and CONFIRM
6.	On/off stove or restore from sleep mode.
7.	-
8.	Battery compartment

FREQUENCY BANDS	MAXIMUM POWER TRANSMITTED
868,3 MHz	**4 mW ERP**
869,85MHz	**4 mW ERP**

DISPLAY

SCREEN WITH VENTILATION NOT ENABLED

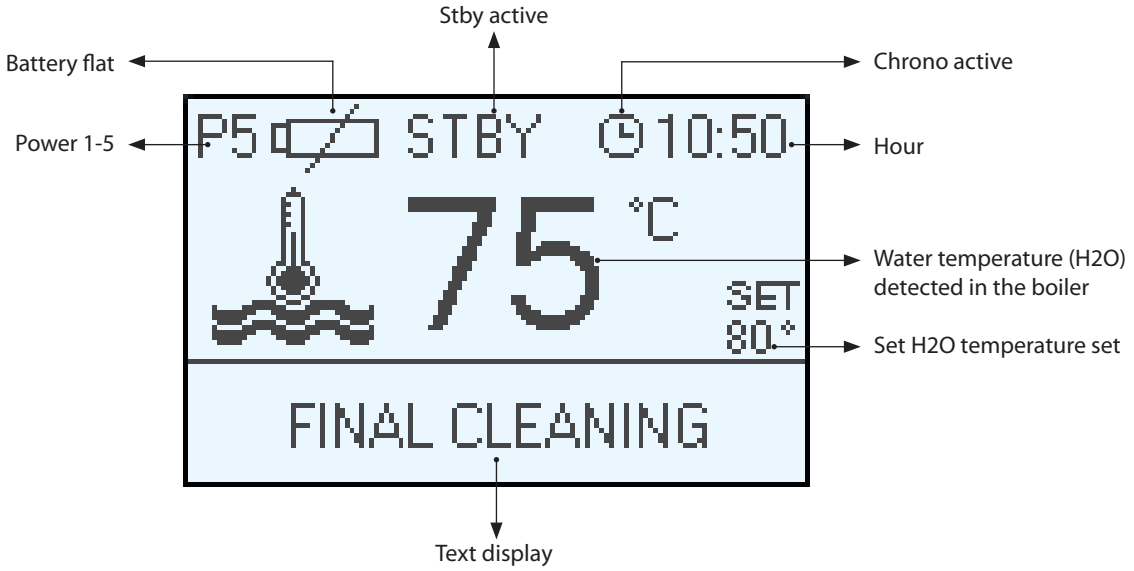

SCREEN WITH VENTILATION ENABLED

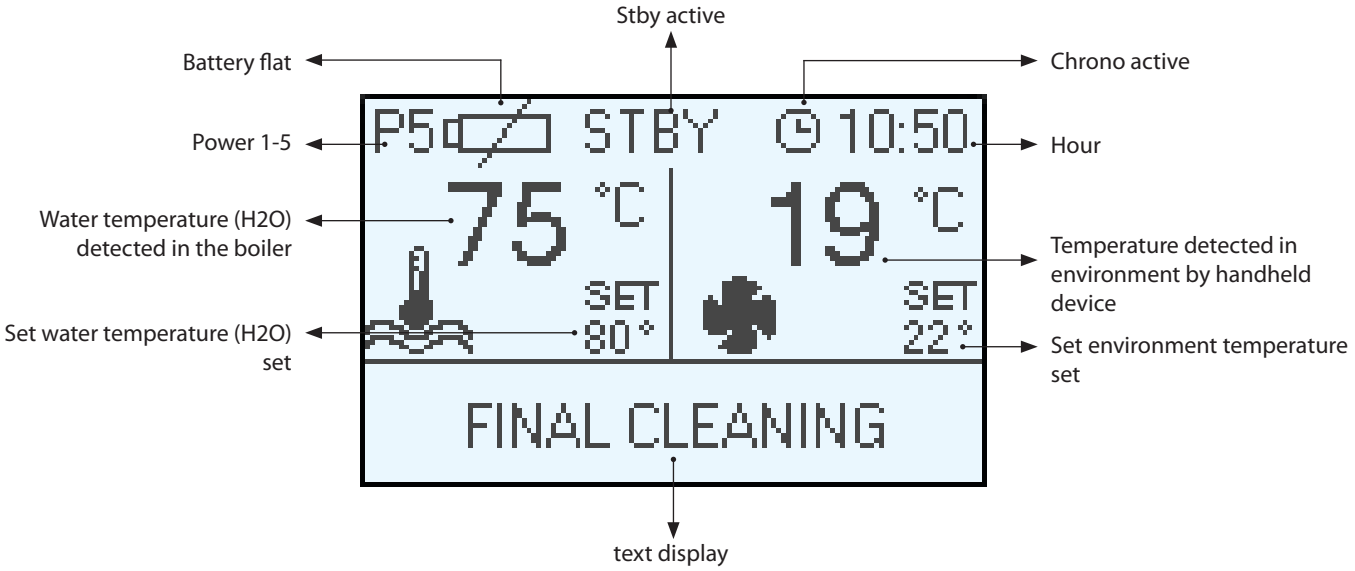

GENERAL MENU

KEY	FUNCTION
∧ ∨	Scroll parameters Modify settings
■	On - off key

KEY	FUNCTION
↩	Back - exit key
OK	Access menu key

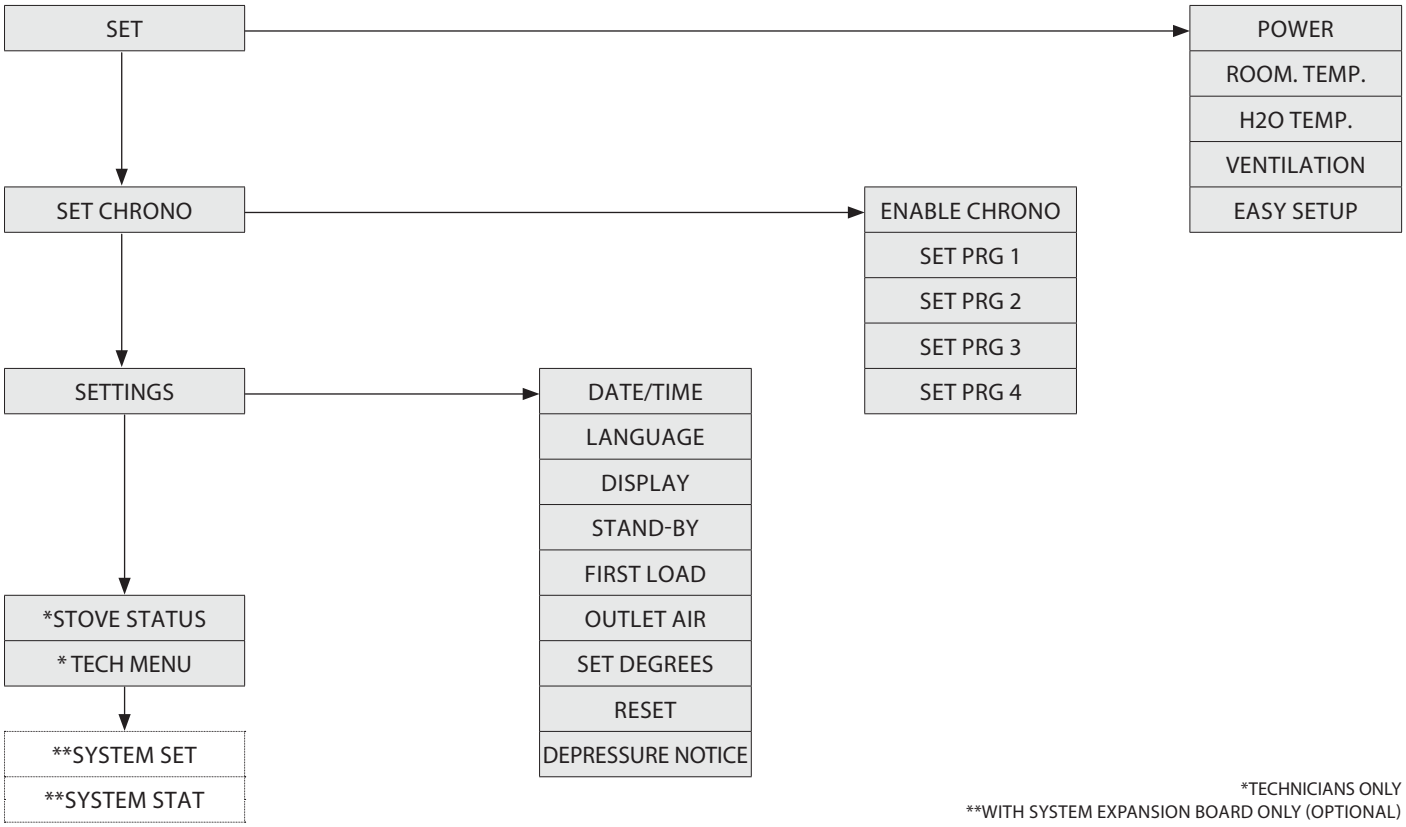

*TECHNICIANS ONLY
**WITH SYSTEM EXPANSION BOARD ONLY (OPTIONAL)

The company has an optional additional board that allows the appliance the following further functions when managing the system. Successively, the various possibilities that the accessory can offer.	
✓ DHW Storage Management	✓ Buffer pump or 4th heating area management
✓ Buffer management	✓ Anti-legionella management for DHW storage
✓ 3 heating areas	✓ DHW storage chrono management
✓ Instant DHW option	✓ Auxiliary output management and control

BASIC INSTRUCTIONS

The following recommendations must be followed the first times the stove is ignited:

- It is possible that slight odours are produced due to the drying of the paints and silicone used. Do not remain in the room for long periods.
- Do not touch the surfaces as they could still be unstable.
- Ventilate the room well several times.
- The hardening of surfaces will stop after several heating cycles.
- This appliance must not be used to burn waste.

Before lighting the stove, the following points must be checked:

- The hydraulic system must be completed in compliance with regulatory guidelines and the instructions in the manual.
- The hopper must be full of pellets
- The combustion chamber must be clean
- The burn pot must be completely free and clean
- Check the hermetic closure of the fire door and the ash drawer
- Check that the power cable is properly connected
- The bipolar switch in the rear right part must be positioned on 1.

COMMISSIONING SETTINGS

Once the power cable at the back of the generator has been connected, move the switch, also located on the back, to (I).

The switch at the back of the generator powers the generator board.
The generator remains off and a first screen appears on the panel reading OFF.

LINE FREQUENCY 50/ 60HZ

If the generator is installed in a country with a frequency of 60Hz, the generator will display "incorrect line frequency". In this case, adjust the frequency to 60Hz.

DATE AND TIME

This menu allows the date and time to be set.

To set: OK > *SETTINGS> DATE/TIME*.

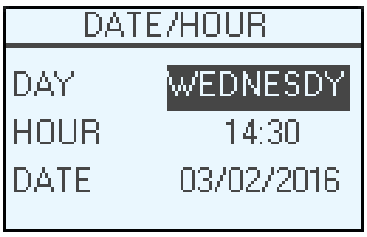

LANGUAGE

This menu allows the preferred language to be selected.

To set: OK > *SETTINGS> LANGUAGE.*

SET DEGREES

This menu allows the preferred unit of measurement to be set.

To set: OK > *SETTINGS>SET DEGREES*

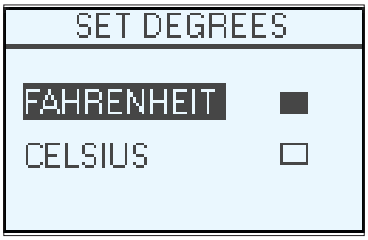

DO NOT USE ANY TYPE OF FLAMMABLE LIQUIDS FOR IGNITION!
DO NOT ALLOW THE BAG OF PELLETS TO COME INTO CONTACT WITH THE BOILING HOT STOVE DURING THE FILLING PHASE!
IN THE EVENT OF CONTINUED FAILURE TO LIGHT, CONTACT AN AUTHORISED TECHNICIAN.

NO IGNITION

THE APPLIANCE MAY FAIL TO LIGHT BECAUSE THE AUGER IS EMPTY AND NOT ALWAYS ABLE TO LOAD THE BURN POT WITH THE NECESSARY QUANTITY OF PELLETS IN TIME TO REGULARLY IGNITE THE FLAME.
IF THE PROBLEM OCCURS AFTER ONLY A FEW MONTHS OF OPERATION, CHECK THAT THE ROUTINE CLEANING DESCRIBED IN THE STOVE BOOKLET HAS BEEN CARRIED OUT CORRECTLY.

IT IS PROHIBITED TO USE THE APPLIANCE WITHOUT THE PARTITION/FLAME GUARD (A) AND PELLET CHUTE ASSEMBLY (B).
REMOVAL WILL COMPROMISE THE SAFETY OF THE PRODUCT AND RESULT IN THE IMMEDIATE NULLIFICATION OF THE WARRANTY PERIOD.
IN THE EVENT OF WEAR OR DETERIORATION, REQUEST THE PART'S REPLACEMENT FROM THE AFTER-SALES SERVICE.
(REPLACEMENT DOES NOT FALL WITHIN THE PRODUCT WARRANTY AS THE PART IS SUBJECT TO WEAR).

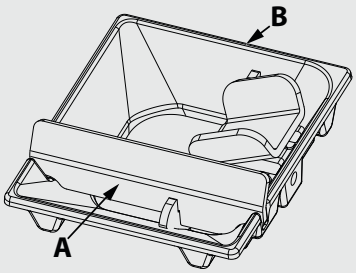

OPERATION AND LOGIC

IGNITION

Once the previously listed points have been checked, press the ■ key for three seconds to ignite the stove.
15 minutes are available for the ignition phase. After ignition and after reaching the control temperature, the stove interrupts the ignition phase and switches to PREPARATION.

PREPARATION

During the preparation phase, the stove stabilises combustion, increasing it progressively, to then start ventilation and switch to WORK.

WORK

During the work phase, the stove reaches the set power set; see following item.

REGULATION OF SET POWER

The set power has 5 operating levels, When the ∧ key is pressed, the set power is displayed; it can be changed using the ∨ or ∧ keys.
Power 1 = minimum level - Power 5 = maximum level.
The change must be confirmed by pressing the key **OK** .

ADJUSTMENT OF SET H2O TEMPERATURE

Set the boiler temperature from 65 - 80°C (set using keys 4 - 5). Pressing the ∨ key allows the temperature set to be displayed; this can be modified using the ∨ or ∧ keys.
The change must be confirmed by pressing the key **OK** .

PUMP OPERATION

The pump activates water circulation when the t° of the water inside the stove reaches approx. 60°C. As the pump always functions above 60°, an always open heating area is recommended to make product functioning homogenous, preventing overheating blocks. Normally this area is defined "Safety zone".

ROOM TEMPERATURE (in the models envisioned)

IT IS possible to activate/deactivate the front ventilation and control the room temperature via the Room probe (integrated in the handheld device). (See "*VENTILATION*" chapter in the following pages.)

BURN POT CLEANING

During the working phase, the stove has an internal timer, which after a pre-set period of time cleans the burn pot.
This phase will be represented on the display, interrupting pellet loading and increasing the fumes motor revs for a period of time determined in programming. When the cleaning phase is finished, the stove will re-start automatically and continue the working phase, returning to the selected power level.

MODULATION and H-OFF

As the water temperature approaches the set point, the boiler starts to modulate automatically bringing itself to the minimum power. If the temperature increases beyond the set point, it will automatically switch off indicating **H-OFF** and will automatically go back on when the temperature drops below the set point.

SWITCH-OFF

Press the ■ key for three seconds.
Once this operation has been performed, the appliance automatically enters the switch-off phase, blocking the supply of pellets.
The flue gas exhaust motor and the hot air flow motor will remain on until the stove temperature has dropped below the default parameters.

RE-IGNITION

The stove can only be re-ignited automatically or manually when the cooling cycle conditions and the preset timer have been satisfied.

SET

POWER

The menu allows the generator power to be set Minimum power 1, maximum power 5.

To set: *OK > SET > POWER.*

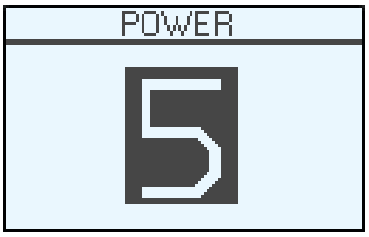

ROOM TEMPERATURE

The menu allows the room temperature to be reached to be set (front ventilation must be active). Range: OFF - 07 - 40°C.

To set: *OK > SET > ROOM TEMP..*

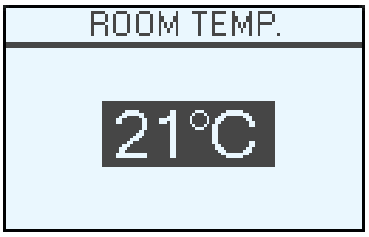

H2O TEMPERATURE

The menu allows the boiler temperature to be set Range: 65 - 80°C.

To set: *OK > SET > TEMP.. H2O.*

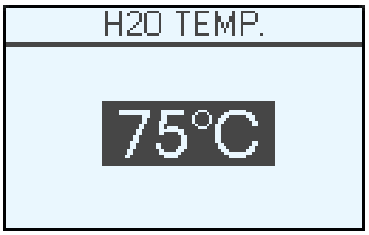

VENTILATION

This menu allows the tangential motor to be enabled or disabled and to adjust fan speed.

To set: *OK > SET > VENTILATION.*

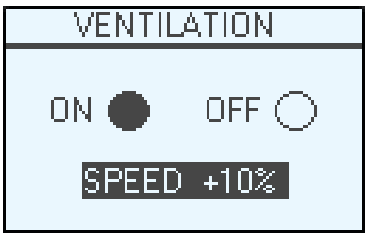

EASY SETUP

The volumetric weight of the pellet is the ratio between the weight and the volume of the pellet. This ratio can change maintaining the quality of the pellet unaltered. Using the EASY SETUP function, it is possible to change the calibration of the volumetric weight, increasing or decreasing the set values. In the stove program, the values available go from "– 3" to "+ 3"; all stoves are calibrated on production with the default value, which is 0

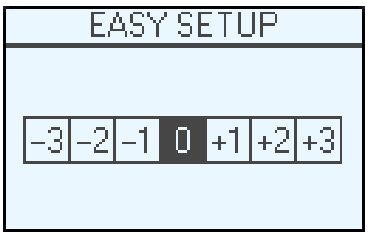

If there should be excessive deposit in the burn pot, enter the EASY SETUP program and lower the value by one unit to "- 1"; wait until the next day and if there is no improvement decrease further to a maximum of "- 3". Instead, if the necessity to increase calibration of the volumetric weight of the pellet is detected, pass from the default value of "0" to "+ 1, + 2, + 3" as required.

To set: *OK > SET > EASY SETUP.*

EXCESSIVE PELLET DEPOSIT IN THE BURN POT			NORMAL OPERATION	LOW PELLET DEPOSIT IN THE BURN POT		
-3	-2	-1	0	+1	+2	+3
THIRD DECREASE RANGE IF THE FIRST TWO ARE NOT SUFFICIENT	SECOND DECREASE RANGE IF THE FIRST IS NOT SUFFICIENT	FIRST DECREASE RANGE (TEST FOR 1 DAY)	BEST FACTORY-SET VALUE	FIRST INCREASE RANGE	SECOND INCREASE RANGE IF THE FIRST IS NOT SUFFICIENT	THIRD INCREASE RANGE IF THE FIRST TWO ARE NOT SUFFICIENT

N.B.: If this calibration does not solve the deposit of pellets present in the burn pot, please contact your local after-sales centre.

SET CHRONO

This function allows the generator's ignition and switch-off to be automatically programmed. By factory default, the SET CHRONO is disabled. The chrono allows the programming of 4 time slots within a day, which can be used every day of the week. Ignition and switch-off times can be set for each time slot, along with the specific days of application for the programmed time slot and the desired temperature. Current day and time settings are essential for the correct operation of the Chrono.

ENABLE CHRONO

Allows the chrono and the different stove time slots to be enabled/disabled.

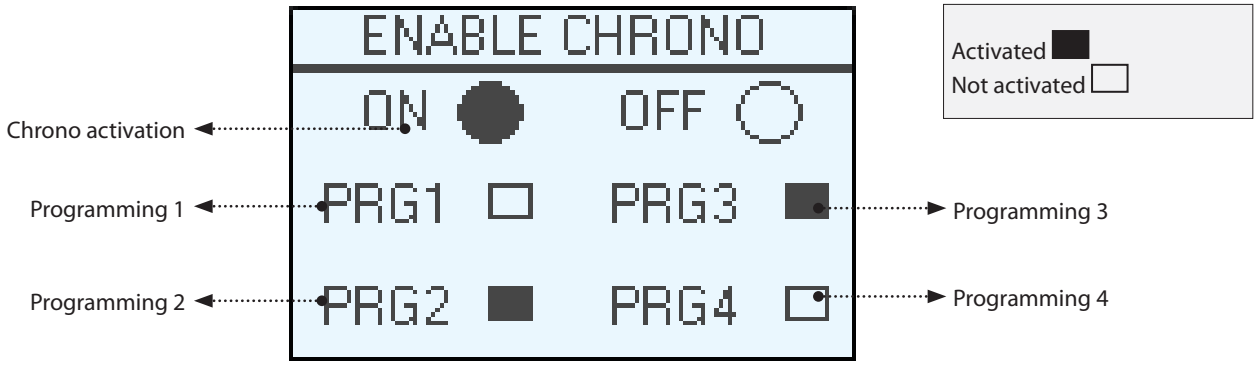

PRG 1-4

The switch-on and switch-off time along with the days of use of the programmed time slot and the desired water temperature (65 - 80°C) can be set. Current day and time settings are essential for the correct operation of the Chrono.

To set: *OK* > *SET CHRONO* > *SET PRG1-4.*

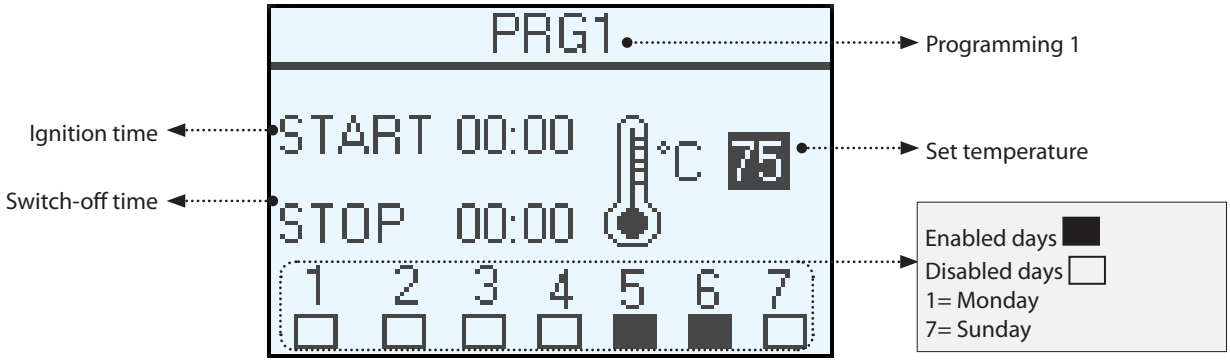

RECOMMENDATIONS	EXAMPLE	
The ignition and switch-off times must be within the space of one day, from 0 to 24 and not over several days. Before using the chrono function, set the current day and time. Then check that the points listed in the "Set clock" sub-chapter have been followed, so that the chrono function works. Aside from programming it, activate it as well.	Ignition time 07:00 Switch-off time 18:00	**CORRECT**
	Ignition time 22:00 Switch-off time 05:00	**INCORRECT**

WHEN THE WEEKLY PROGRAMMER IS ACTIVE, THE RELATIVE ICON WILL BE SHOWN ON THE HANDHELD DEVICE DISPLAY.

SETTINGS

◆ **DATE/TIME** ◆ **LANGUAGE** ◆ **SET DEGREES**	SEE CHAPTER: COMMISSIONING SETTINGS.

DISPLAY

The "DISPLAY" menu allows:

- Regulation of Display contrast
- Activation/Deactivation of backlight.
- Enabling/disabling of acoustic signal.
- Setting of the timer to turn off the Display backlight.
- Setting of the timer to turn off the Display (sleep mode).

To set: *OK > SETTINGS> LANGUAGE.*

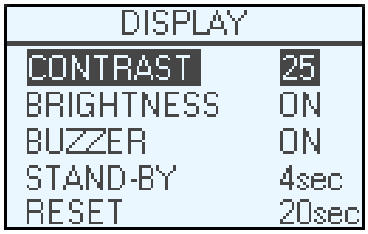

STAND-BY

The Stby function is used in the event the stove needs to turnoff immediately or modulation via additional thermostat. STBY will be seen on the display, which indicates the function is active.

To set: *OK > SETTINGS > STAND-BY.*

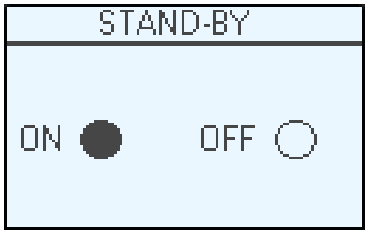

THIS FUNCTION IS NOT RECOMMENDED FOR ENVIRONMENTS WITH SCARCE THERMAL INSULATION OR WHERE THERE MAY BE SHARP FLUCTUATIONS IN TEMPERATURE: DOORS OR WINDOWS CONSTANTLY OPENED.

FIRST LOAD

This function allows the auger to be filled, facilitating the stove commissioning phases, or if the pellet hopper has remained empty.
With the stove cold and in "OFF", make sure the pellets have been introduced inside the hopper and activate the *FIRST LOAD* function, confirming with OK.

To interrupt continuous loading, just press the ■ key for 3 secs.

To set: *OK > SETTINGS > FIRST LOAD.*

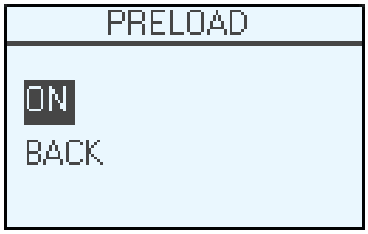

REMEMBER ALWAYS TO COMPLETELY EMPTY THE BURN POT BEFORE IGNITION AND THAT THE HOLES IN THE BURN POT ARE ALL FREE. NEVER EMPTY THE BURN POT INSIDE THE PELLET HOPPER, FIRE RISK!

OUTLET AIR

This function allows any air in the stove to be discharged. By activating the pump function, it will be powered alternatively with 30 second work phases and 30" stop for 15 minutes. With the stove cold and in "OFF", activate the *OUTLET AIR* function, confirming with OK. To interrupt, remove the power supply.

To set: *OK > SETTINGS > OUTLET AIR.*

RESET

Allows the user to reset all modifiable values to the default values.

To set: *OK > SETTINGS > RESET.*

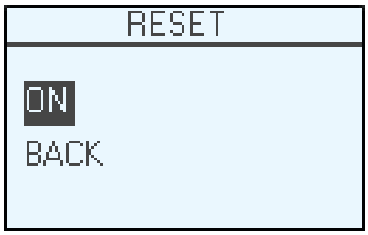

DEPRESSURE NOTICE

It allows to activate the warning buzzer if the door or hopper is open.
Please note: activating this buzzer may reduce battery life by 30%.
Battery life depends on use.

To set: OK>SETTINGS>DEPRESSURE NOTICE

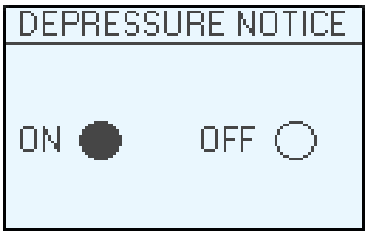

ADDITIONAL FUNCTIONS

AUX

If the producer's conveyed wave accessories are used, the connection must be made by the qualified technician directly in the board. Contact the dealer for further details

LCD HANDHELD REMOTE ROOM PROBE CALIBRATION

This mode allows calibration of the room temperature detected by the LCD handheld remote (with ventilation active only). For correct calibration, it is recommended to position the LCD handheld remote in a room with constant temperature and wait for at least two hours. Below find the calibration procedure:

- Access the menu and reach "TECH MENU".
- Set the access key "F4". - "ADJ REMOTE PROBE"
- Use the ∨ or ∧ keys to adjust the desired room calibration.
- Save and exit via the ■ key.

ADDITIONAL THERMOSTAT

N.B. : Installation must be performed by an authorised technician
It is possible to thermostat a room adjacent to the room where the stove is positioned: just connect a thermostat following the procedure described in the next step (it is recommended to position the optional mechanical thermostat at a height of 1.50 m from the floor) . Stove operation with external thermostat connected in the clamp TA can be different on the basis of activation or deactivation of the STAND-BYfunction.

By default, the clamp TA exits jumpered, therefore it always has closed contact (on request).

ADDITIONAL THERMOSTAT FUNCTIONING WITH STAND-BY **ACTIVE**
When the function is activated, STBY will be shown on the display. When the contact or external thermostat is not satisfied (open contact =temperature reached), the stove will switch off. As soon as the contact or external thermostat switches to the "not satisfied" status (closed contact / temperature to be reached) it will re-ignite.
Nota bene: stove operation depends on the temperature of the water inside the stove and relative factory setting restrictions. If stove is in H-OFF (water temperature reached), any additional contact or thermostat request will be ignored.

ADDITIONAL THERMOSTAT OPERATION WITH STAND-BY **DEACTIVATED**
When the contact or external thermostat is satisfied (open contact / temperature reached), the stove will go to minimum. As soon as the contact or external thermostat switches to the "not satisfied" status (closed contact / temperature to be reached) it will start to work again at the pre-set power.
Nota bene: stove operation depends on the temperature of the water inside the stove and relative factory setting restrictions. If stove is in H-OFF (water temperature reached), any additional contact or thermostat request will be ignored.

ADDITIONAL THERMOSTAT INSTALLATION

- Switch the appliance off using the master switch positioned on the rear of the stove.
- Remove the plug from the socket.
- Connect the two cables of the thermostat to clamp (TA), positioned on the rear of the machine.

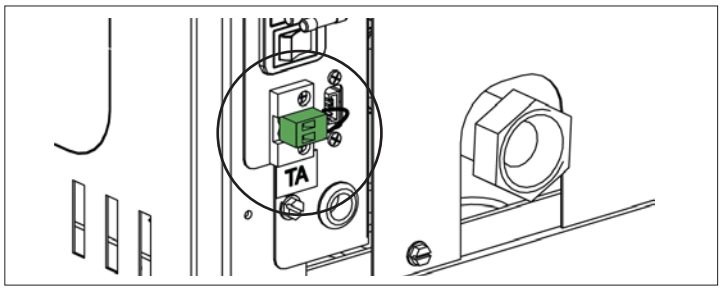

TO FIND OUT WHICH IS YOUR NEAREST AFTER-SALES CENTRE, CONTACT YOUR DEALER OR VISIT THE WEBSITE WWW.LANORDICA-EXTRAFLAME.COM

CLEANING AND MAINTENANCE

ALWAYS FOLLOW THE INDICATIONS IN MAXIMUM SAFETY!

- Make sure that the power supply cable plug is disconnected, since the generator could be programmed to switch-on.
- That the generator is completely cold.
- The ashes are cold.
- Guarantee effective ventilation of the room when cleaning the product.
- Lack of cleaning jeopardises correct operation and safety!

MAINTENANCE

For correct functioning, the generator must undergo routine maintenance by a qualified technician, at least once a year.
The periodic controls and maintenance must always be performed by specialised technicians, which operate in compliance with the regulations in force and the indications given in this use and maintenance manual.

EVERY YEAR HAVE THE FUMES EXHAUST PLANT, FUME DUCTS AND "T" FITTINGS AND INSPECTION CAPS CLEANED - BENDS AND HORIZONTAL STRETCHES IF PRESENT!
THE CLEANING FREQUENCY OF THE GENERATOR IS INDICATIVE! IT DEPENDS ON THE QUALITY OF THE PELLETS USED AND FREQUENCY OF USE.
THESE OPERATIONS MAY HAVE TO BE PERFORMED MORE FREQUENTLY.

PERIODIC CLEANING BY THE USER

As indicated in this use and maintenance manual, periodic cleaning must be performed paying great attention, after having read the indications, to the procedures and times described herein.

CLEANING THE SURFACES AND COVERING

Never use abrasive or chemically aggressive detergents for cleaning!
The surfaces must be cleaned when the generator and covering are completely cold. Fir maintenance of surfaces and metal parts, just use a cloth dampened in water or water and neutral soap.
Failure to comply with the indications can damage the surfaces of the generator and cause the warranty to become null and void.

CLEANING THE CERAMIC GLASS

Never use abrasive or chemically aggressive detergents for cleaning!
The ceramic glass must only be cleaned when cold!
To clean the ceramic glass, just use a dry brush and newspaper dampened and passed through the ash. If the glass is very dirty, use a detergent specific for ceramic glass exclusively. Spray a modest amount on a cloth and use it on the ceramic glass. Do not spray the detergent or any other liquid directly onto the glass or gaskets!
Failure to comply with the indications can damage the surface of the ceramic glass and cause the warranty to become null and void.

CLEANING THE PELLET HOPPER

When the hopper is completely empty, disconnect the generator power supply cable and first remove the residues (dust, shavings, etc.) from the empty hopper before filling it.

THE FOLLOWING IMAGES ARE ILLUSTRATIONS ONLY.

EVERY DAY

SCRAPERS:

The heat exchangers must only be cleaned when cold! Its cleaning guarantees constant heat output over time. This maintenance must be performed at least once a day. To do this, use the scrapers positioned in the upper part of the generator, making upward and downward moments several times.

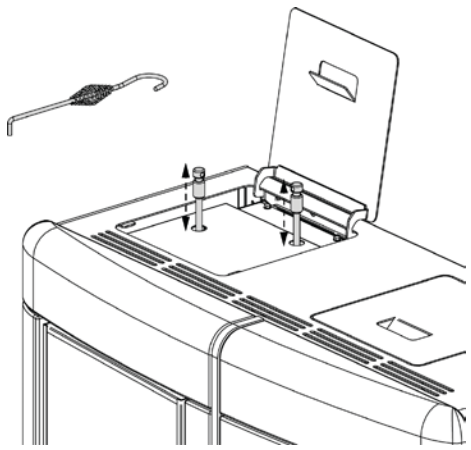

EVERY 7 DAYS

BURN POT AND COMBUSTION CHAMBER:

The burn pot is cleaned via a mechanical system at pre-fixed intervals automatically by the boiler. **It is recommended to remove any residues using a suction device.**

- Suck up the ash deposited between separator and fire door.
- Remove separator and pellet chute assembly.
- Use a suction device to thoroughly clean the combustion chamber and the bottom of the burn pot.

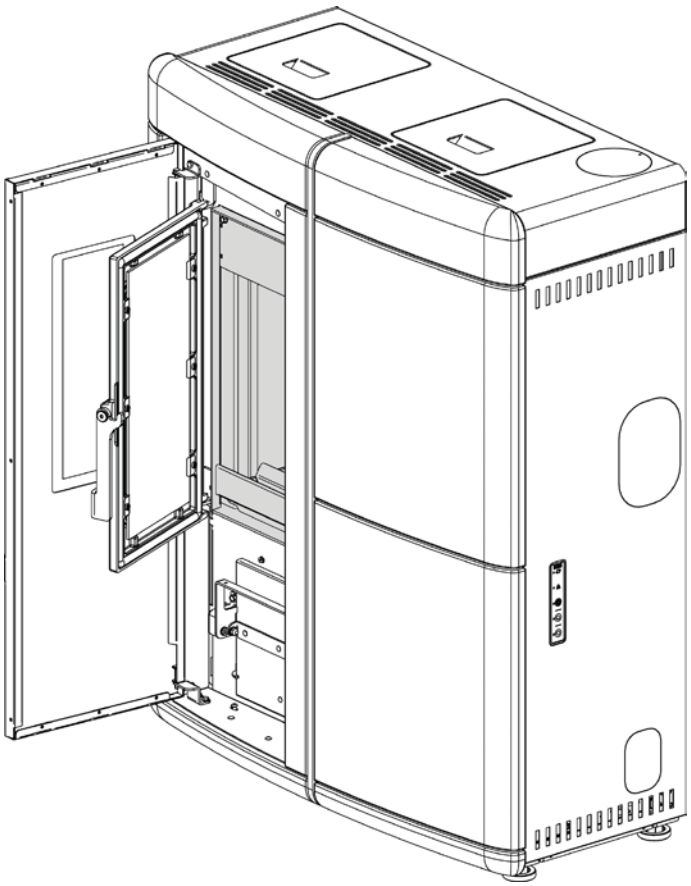

EVERY 15 DAYS

ASH DRAWER:

- Remove the ash drawer and empty it into a relevant container.

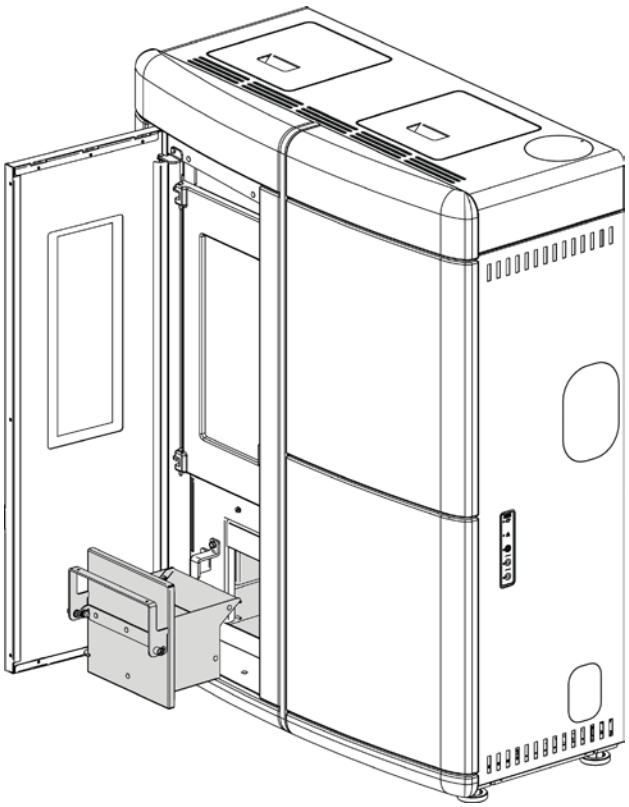

EVERY 30 DAYS

Cleaning "T" fitting with inspection cap outside the stove: check and clean at least once a month

A CLEAN BURN POT GUARANTEES CORRECT OPERATION!

MAINTAINING THE BURN POT AND ITS HOLES ALWAYS WELL CLEAN FROM ANY COMBUSTION RESIDUES, EXCELLENT COMBUSTION BY THE GENERATOR IS GUARANTEED OVER TIME, PREVENTING ANY MALFUNCTIONING THAT COULD REQUIRE TECHNICIAN INTERVENTIONS.

THE "EASY SETUP" FUNCTION IN THE USER MENU CAN BE USED TO ADAPT COMBUSTION ON THE BASIS OF THE NEEDS DESCRIBED.

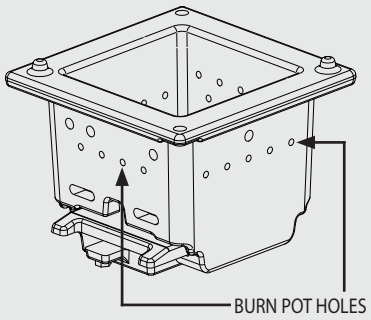

IF THE POWER SUPPLY CABLE IS DAMAGED, IT MUST BE REPLACED BY THE AFTER-SALES SERVICE OR BY A SIMILARLY QUALIFIED PERSON, SO AS TO AVOID ALL RISKS.

BURN POT DETAIL

The burn pot is made up from several parts:
The burn pot (A) fixed, not removable, where combustion takes place physically. A separator/flame guard (B) and a pellet chute assembly (C).

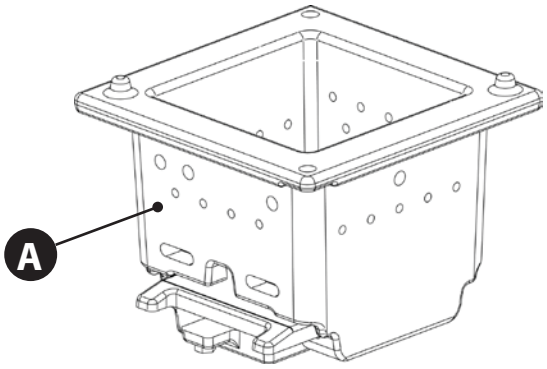

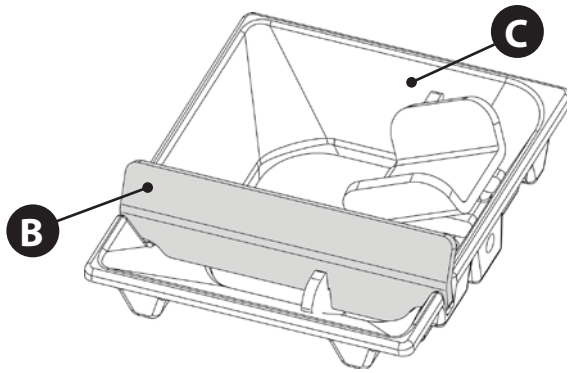

To clean the burn pot, the separator must be removed along with the assembly, lifting it from the rear (see illustration below).
Perform the same operation in reverse order to re-assemble.
After having re-positioned, always make sure:

- **that the pellet chute assembly rests correctly on the burn pot and not on any other surface of the combustion chamber.**
- **that the chute assembly has been pushed towards the fire wall (D) (to the right).**

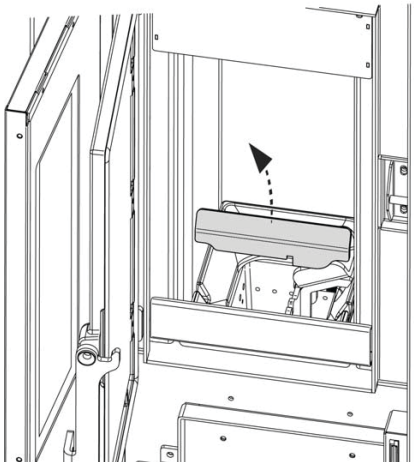

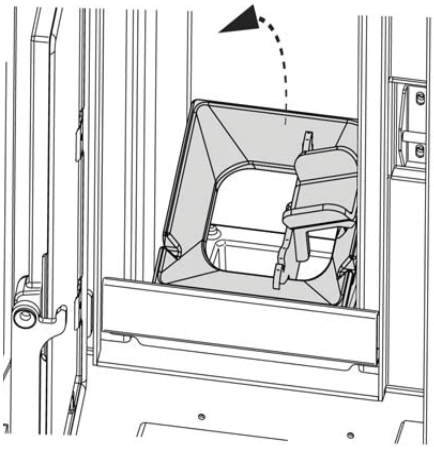

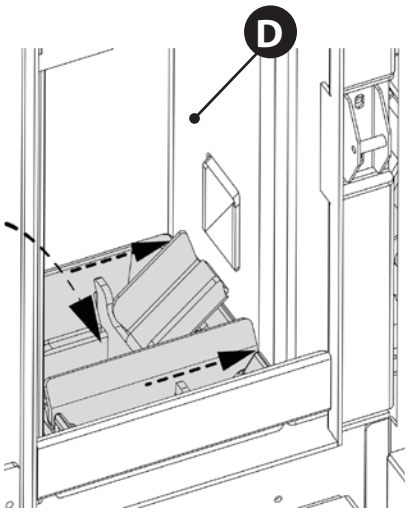

TO FIND OUT WHICH IS YOUR NEAREST AFTER-SALES CENTRE, CONTACT YOUR DEALER OR VISIT THE WEBSITE WWW.LANORDICA-EXTRAFLAME.COM

ROUTINE MAINTENANCE PERFORMED BY ENABLED TECHNICIANS

Routine maintenance must be performed at least once a year.
Using pellets as solid fuel, the generator requires annual routine maintenance, which must be performed by a **Qualified technician, using original spare parts exclusively.**
Failure to comply can jeopardise safety of the appliance and make the warranty null and void.
Respecting the frequencies of cleaning reserved for the user described in the use and maintenance manual, the generator is guaranteed correct combustion over time, preventing any anomalies and/or malfunctioning that could require more interventions of the technician. Requests for routine maintenance are not contemplated in the product warranty.

DOOR, ASH GASKETS: PELLET TANK LID, DOOR, ASH DRAWER AND BURNING POT AND BURN POT GASKETS
The gaskets guarantee the tightness of the stove and its consequent good functioning.
They must be controlled periodically. They must be replaced immediately if they are worn or damaged.
These operations must be carried out by a qualified technician.

CONNECTION TO THE FLUE
Suck and clean the pipe that leads to the flue yearly or anytime that it is necessary. If there are horizontal tracts the residues must be removed before they can obstruct fumes passage.

DECOMMISSIONING (END OF SEASON)

At the end of every season, before switching the stove off, it is recommended to empty the pellet hopper completely, sucking up any residual pellets and dust it contains.
WE ADVISE YOU NOT TO DISCONNECT THE GENERATOR FROM THE ELECTRICAL POWER SUPPLY, SO AS TO ALLOW THE PUMP TO PERFORM THE NORMAL ANTI-LOCKING CYCLES.
Routine maintenance must be performed at least once a year.

ROUTINE MAINTENANCE

THE IMAGES ARE ILLUSTRATIONS ONLY.

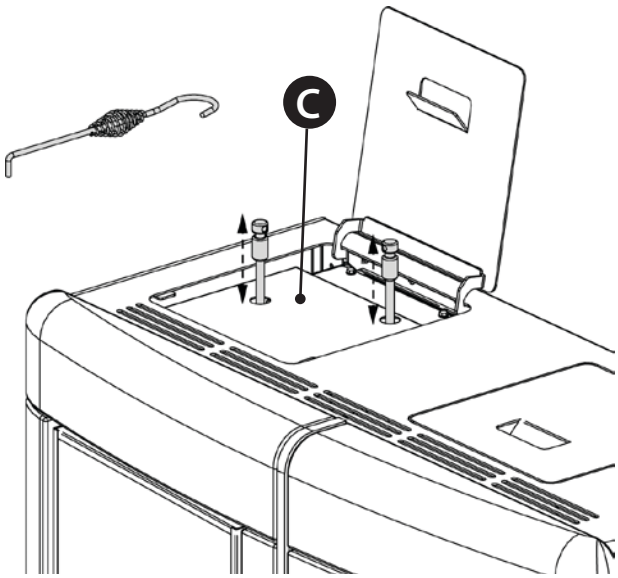

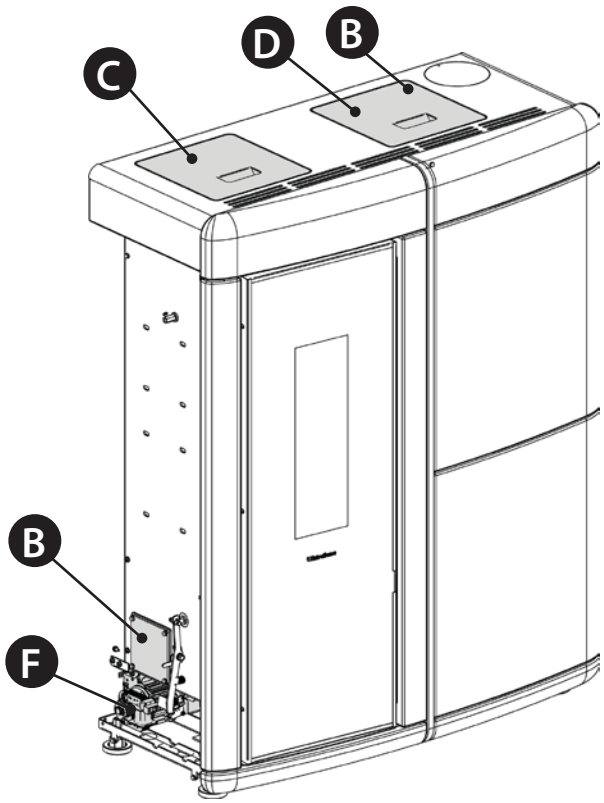

A	Fumes motor (disassembly and cleaning and fumes pipe and "T"), new silicone in the provided points
B	Gaskets, pellet tank, inspections, ash drawer and door (replace and apply silicone where required)
C	Combustion chamber and heat exchanger (full cleaning) including ignition-plug pipe
D	Hopper (complete emptying and cleaning).
E	Check air intake pipe and cleaning of the flow sensor
F	Room air fan disassembly and removal of dust and pellet debris.

TO FIND OUT WHICH IS YOUR NEAREST AFTER-SALES CENTRE, CONTACT YOUR DEALER OR VISIT THE WEBSITE WWW.LANORDICA-EXTRAFLAME.COM

THE IMAGES ARE ILLUSTRATIONS ONLY.

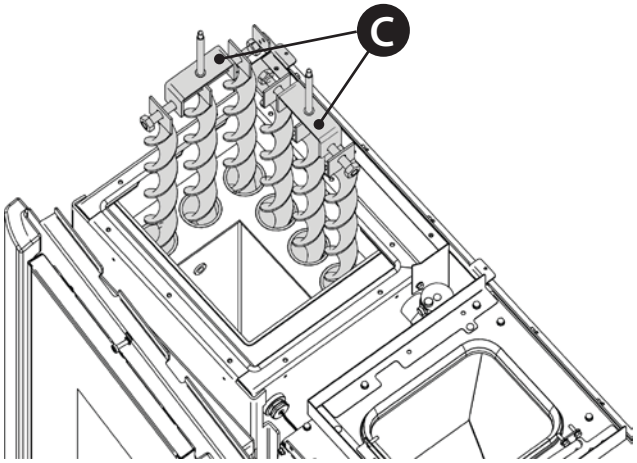

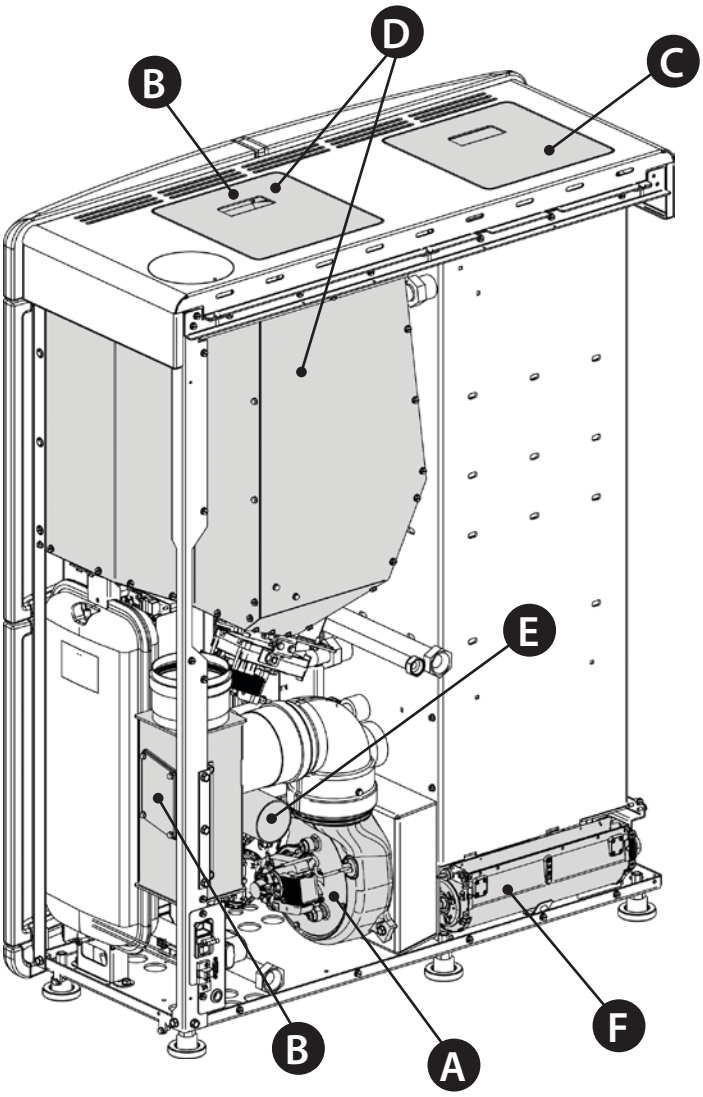

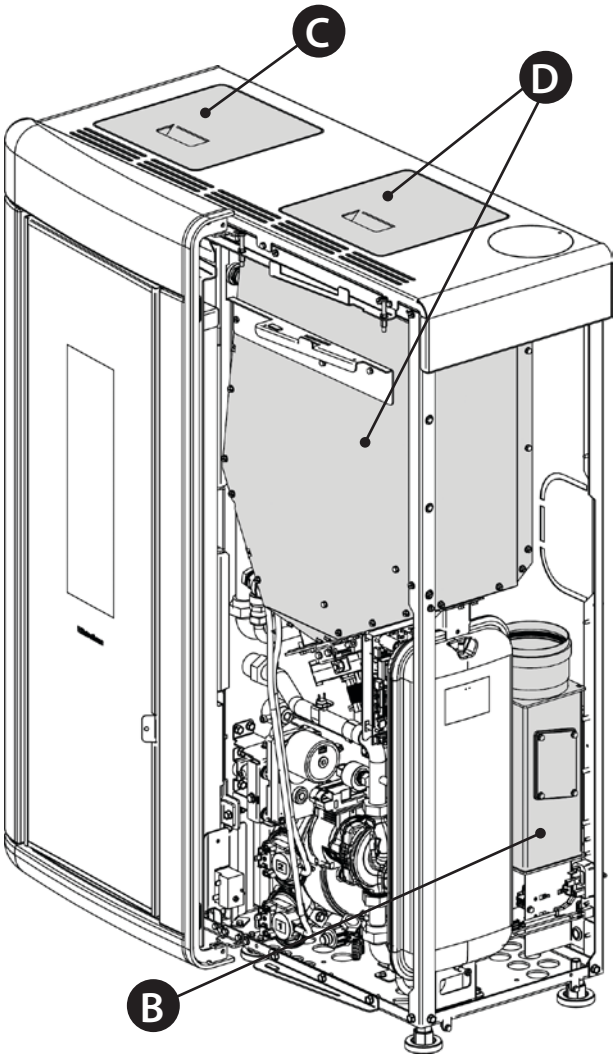

A	Fumes motor (disassembly and cleaning and fumes pipe and "T"), new silicone in the points envisioned
B	Gaskets, pellet tank, inspections, ash drawer and door (replace and apply silicone where required)
C	Combustion chamber and heat exchanger (full cleaning) including ignition-plug pipe
D	Hopper (complete emptying and cleaning).
E	Check air intake pipe and cleaning of the flow sensor
F	Room air fan disassembly and removal of dust and pellet debris.

DISPLAYS	
DISPLAY	**REASON**
OFF	Generator off
START	The start-up phase is in progress
PELLET LOADING	Continuous pellet feeding is in progress during the ignition phase
IGNITION	The ignition phase is in progress
PREPARATION	Thepreparationphase is in progress
WORK	The normal work phase is in progress
MODULATION	The generator is working at minimum
BURN POT CLEANING	Automatic burn pot cleaning is in progress
FINAL CLEANING	The final cleaning is in progress
STAND-BY	Generator off waiting for re-ignition due to an external thermostat
ATTESA COOLING WAIT	A new ignition is attempted when the generator has just been switched off. When the generator switches off, one must wait for the complete shutdown of the fumes motor, then clean the burn pot. The generatorcan only be re-ignited when these operations have been performed.
H-OFF	Generator off due to water temperature over set
***ROOM-T**	Displays the room temperature (in models set-up).
***T - OFF**	Generator off waiting for re-ignition due to all requests met
ATTESA BLACK OUT WAIT	Thegenerator is cooling after a power cut. Once cooling is completed it will re-start automatically
ANTI-FREEZING	The anti-freeze function is in progress as the H2O t is below the factory set threshold the pump is active until the water reaches the pre-set factory parameter +2°C
ANTI-BLOCK	The pump antilock function is in progress (only if the generator has been in an OFF state for at least 96 hours); the pump is activated for the time pre-set by the manufacturer, in order to prevent it from blocking
BLOW	The automatic blow is active

ALARMS		
DISPLAY	**EXPLANATION**	**SOLUTION**
⚠	Indicates the presence of an alarm.	On: indicates the presence of an alarm. Flashing: indicates the deactivation of the depression sensor. The alarm can only be reset if the fumes motor has stopped and 15 minutes have passed since the alarm was displayed, by pressing key 1/⏻ for 3 seconds.
FUMES MOTOR FAULT	Fumes motor fault	Contact after-sales centre
FUMES PROBE	Fumes probe fault.	Contact after-sales centre
HOT FUMES	High fumes temperature	Check pellet feed (see "Pellet feed adjustment"). If the problem cannot be solved, contact an authorised technician.
NO IGNITION	The pellet hopper is empty. Pellet feed calibration inadequate. Thermostat bulbs tripped.	Check for the presence of pellets in the hopper. Adjust the pellet flow (see "Pellet feed adjustment"). Check the procedures described in the "Ignition" chapter. Check bulb thermostat (see REARM chapter)
BLACK OUT NO IGNITION	No current during the ignition phase.	Take the stove to OFFconditions using key 1 and repeat the procedure described in the "Ignition" chapter.

* on models set-up.

TO FIND OUT WHICH IS YOUR NEAREST AFTER-SALES CENTRE, CONTACT YOUR DEALER OR VISIT THE WEBSITE WWW.LANORDICA-EXTRAFLAME.COM

NO FLAME	The pellet hopper is empty. No pellet feed. The motor reducer does not feed pellets.	Check for the presence of pellets in the hopper. Adjust the pellet flow (see "Pellet feed adjustment").
DEPRESSION ALARM	The door is not closed correctly. The ash drawer is not closed correctly. The combustion chamber is dirty. The fumes exhaust pipe is blocked/dirty.	Check hermetic door closure. Check hermetic closure of the ash drawer. Check cleanliness of the fumes pipe and the combustion chamber.
H2O OVERTEMP-	Air in the system Inadequate circulation	Possible air in the system; bleed the system. Lack of adequate circulation. Lack of or inadequate safety zone. The water in the stove has exceeded 95°C. Possible pump anomaly. If the problem persists, restore operations must be performed by an authorised technician.
*** TRAPDOOR BLOCKED**	The automatic cleaning of the burn pot is blocked. Clogged dirty burn pot The door is not closed correctly.	Check correct door closure. Check that the burn pot is free and clean. The automatic cleaning of the burn pot is blocked. If the problem persists, contact the after-sales centre
MIN H20 PRESSURE ALARM	The system pressure read by the pressure switch is too low.	Possible air in the system; bleed the system. Possible lack of water or leaks due to anomalies in some system component. If the problem persists, contact the after-sales centre
H2O PROBE	H2O probe failure	Contact after-sales centre
MAX H20 PRESSURE ALARM	The pressure of the water has exceeded the max threshold	Possible air in the system; bleed the system. Check that the expansion vessels are not damaged or under-dimensioned Check that the cold system is loaded at the correct pressure If the problem persists, contact the after-sales centre
*** PRESSURE SENSOR DAMAGED**	Pressure differential sensor faulty, disconnected or failure.	Contact after-sales centre
*** AUGER CONTROL ALARM**	Pellet feed anomalous operation	Contact after-sales centre
*** AUGER BLOCKED**	Pellet motor anomalous operation	Contact after-sales centre
*** DHW PROBE**	DHW probe fault.	Contact after-sales centre
*** BUFFER TANK PROBE**	Buffer tank probe fault.	Contact after-sales centre
*** EMPTY HOPPER**	The pellet hopper is empty. The door is not closed correctly. The ash drawer is not closed correctly. The combustion chamber is dirty. The fumes exhaust pipe is blocked.	Check for the presence of pellets in the hopper. Check hermetic door closure. Check hermetic closure of the ash drawer. Check cleanliness of the fumes pipe, of the sensor in the primary air channel and the combustion chamber. Contact after-sales centre
MAX ELECTRICAL CUR-RENT	The automatic cleaning of the burn pot is blocked. Clogged dirty burn pot The door is not closed correctly.	Check correct door closure. Check that the burn pot is free and clean. The automatic cleaning of the burn pot is blocked. If the problem persists, contact the after-sales centre
CLOSE HOPPER - STOVE DOOR	Pellet hopper open. Door open. Air vent blocked or dirty.	Check correct closure of the pellet hopper, door and ash drawer. Check air inlet.
PWM INTERFACE ALARM	IPWM output interface damaged, in short circuit or not connected	Contact after-sales centre
HOT PWM ALARM	The pump is operating but not with good performance. Undervoltage 160-194v. Pump in circuit breaker protection mode.	Contact after-sales centre
STOPPED PWM ALARM	The pump has stopped but is still operational. Undervoltage < 160v. Overvoltage. Unexpected external flow.	Contact after-sales centre
STOPPED 2 PWM ALARM	The pump has stopped but is still operational. Problem in a component different to the pump. Debris in installation. Positioning in high temperature.	Contact after-sales centre
BLOCKED PWM ALARM	The pump has stopped permanently. Pump blocked. Electronic module damaged	Contact after-sales centre
FLOW PWM ALARM	Pump blocked. Liquid with high density. Pipe obstructed.	Contact after-sales centre

* on models set-up.

TO FIND OUT WHICH IS YOUR NEAREST AFTER-SALES CENTRE, CONTACT YOUR DEALER OR VISIT THE WEBSITE WWW.LANORDICA-EXTRAFLAME.COM

GUARANTEE TERMS

1. Extraflame S.p.A. products are guaranteed, within the European community, for 24 months from the date of purchase.
Purchase has to be proved by means of a valid fiscal document issued by the seller (receipt, invoice or shipment document) identifying the purchased product and its purchase and/or delivery date.

WARNING: This conventional guarantee does not replace the guarantee regulated by the European legislation on consumer rights.

The conventional guarantee is only applicable to the Italian region and to those areas, within the European Community, where the Authorised Technical Assistance Centres are active (see the www.lanordica-extraflame.com website)
It is also limited to the state of residence of the consumer, which must coincide with the premises and/or registered office of the seller of the Extraflame S.p.A. product
These regulations do not apply if the product is purchased within commercial, entrepreneurial, or professional circumstances. In these cases the product guarantee will be limited to a period of 12 months from the date of purchase.

ITALIAN GUARANTEE

What must be done if there is a product malfunction:
Consult the instructions manual to make sure the malfunction cannot be solved by using the product correctly. Make sure the malfunction is included in those covered by the guarantee; otherwise the cost of the intervention will be borne entirely by the consumer. When requesting the intervention of the Assistance service at the Authorised Assistance Centre, always specify: - type of malfunction - model of the appliance - complete address - phone number

EUROPEAN GUARANTEE

What must be done if there is a product malfunction:
Consult the instructions manual to make sure the malfunction cannot be solved by using the product correctly. Make sure the malfunction is included in those covered by the guarantee; otherwise the cost of the intervention will be borne entirely by the consumer. Request the intervention of the Assistance service or the address of the Authorised Technical Assistance Centre to the seller; always specify: type of malfunction, model of the appliance, complete address and phone number

If the malfunction arises in the first 6 months of the product's life, the consumer has the right to have the product repaired with no expense. From the seventh to the twenty-fourth month, if a malfunction arises, the consumer will bear the cost of the call, while the seller will pay for the manpower and for any spare parts used.

2. If the malfunction is linked to external events and/or conditions such as, including but not limited to, insufficient capacity of the systems; wrong installation and/or maintenance by the personnel which hasn't got the skills prescribed by the laws of the country of residence of the consumer; negligence; inability to use the product and wrong maintenance by the consumer, with respect to what is reported and recommended by the instructions manual of the product, which is part of the sales contract, this guarantee will be void.
Damage to the product that cannot be related to manufacturing defects are also not included in this guarantee. Similarly are excluded defects related to incorrect operation of the flue, according to the legislation in force in the country at the moment of purchase. Other exclusions include all product defects due to carelessness, accidental breakdown, tampering and/or damage during transport (scratches, dents, etc.), interventions carried out by unauthorised personnel and further damage caused by incorrect interventions by the consumer trying to arrange the initial malfunction.
The following consumables are excluded by the guarantee: gaskets, ceramic or tempered glasses, cast iron grilles or coatings, refractory materials (e.g. Nordiker or others), painted, chrome-plated or golden parts, majolica ware, handles, the brazier and its related components. For Idro products the heat exchanger is not covered by the guarantee if a suitable condensation-proof circuit is not set up to ensure a return temperature of the device of at least 55°C. The guarantee excludes all the external components on which the consumer can directly operate during use and/or maintenance or that can be subject to wear and/or rust and stains on steel due to aggressive detergents.
If malfunctions are signalled which are not later confirmed during check by an authorised technician, the cost of the intervention will be borne entirely by the consumer.

3. If it is not possible to restore product conformity by repairing it, the product/component will be replaced, the guarantee expiration date and conditions will remain the same established when the product/component to be replaced has been purchased.

4. Extraflame S.p.A. cannot be held liable for injury or damage which may - either directly or indirectly - be caused to persons, animals and property ensuing from failure to observe all the instructions provided in the relevant instruction manual and the warnings regarding installation, use and maintenance of the product, that can also be downloaded on the website.

5. Interventions for adjusting and/or regulating the product for the type of fuel or other reasons are excluded by the guarantee.

6. If the product is repaired in one of the Authorised Technical Assistance Centres indicated by Extraflame S.p.A. and if the product is replaced, transport will be free of charge. If the technician can repair the product at the user's place of residence and they refuse, transport to the workshop and redelivery will be paid by the consumer.

7. After the 24 months of the guarantee have elapsed any repair intervention cost will be completely borne by the consumer.

8. In the case of disputes the only competent court is that of the Extraflame S.p.A. registered office - (Vicenza-Italy)

ADDITIONAL WARNINGS

- Only use the fuel recommended by the manufacturer. The product must not be used as an incinerator.
- Do not use the product as a ladder or supporting structure.
- Do not place laundry on the product to dry it. Any clothes-horse or similar objects must be kept at due distance from the product. Danger of fire or damage to the coating.
- The user is fully liable for any incorrect use of the product. The manufacturer bears no civil or criminal liability for incorrect use.
- Unauthorised tampering of any nature or replacement of spare parts of the product with non-original parts may endanger the operator and the manufacturer bears no civil or criminal liability for this.
- Large parts of the surface of the product can get very hot (door, handle, glass, smoke outlet pipes, etc.). Please therefore avoid coming into contact with these parts without wearing suitable protective clothing or using appropriate measures, such as heat protective gloves.
- DO NOT use the product with the door open or if the glass is broken.
- The product must be electrically connected to a system equipped with an operational earthing system.
- Turn off the product in the event of a failure or malfunctioning.
- Unburned pellets that build up in the burner following each failed start-up must be removed before attempting to start up the product again. Make sure that the burner is clean and correctly positioned before starting it up again.
- Do not wash the product with water. Water may penetrate into the unit and cause faults in the electrical insulation. This can cause electric shocks.
- Installations not complying with the regulations in force, as well as incorrect use and failure to comply with the maintenance scheduled by the manufacturer, will invalidate the guarantee.

DISPOSAL

INFORMATION FOR MANAGEMENT OF ELECTRIC AND ELECTRONIC APPLIANCE WASTE CONTAINING BATTERIES OR ACCUMULATORS

This symbol, which is used on the product, batteries, accumulators or on the packaging or documents, means that at the end of its useful life, this product, the batteries and the accumulators included must not be collected, recycled or disposed of together with domestic waste. Improper management of electric or electronic waste or batteries or accumulators can lead to the leakage of hazardous substances contained in the product. For the purpose of preventing damage to health or the environment, users are kindly asked to separate this equipment and/or batteries or accumulators included from other types of waste and to arrange for disposal by the municipal waste service It is possible to ask your local dealer to collect the waste electric or electronic appliance under the conditions and following the methods provided by national laws transposing the Directive 2012/19/EU.

Separate waste collection and recycling of unused electric and electronic equipment, batteries and accumulators helps to save natural resources and to guarantee that this waste is processed in a manner that is safe for health and the environment.
For more information about how to collect electric and electronic equipment and appliances, batteries and accumulators, please contact your local Council or Public Authority competent to issue the relevant permits.

Extraflame®

Riscaldamento a Pellet

Extraflame S.p.A. Via Dell'Artigianato, 12 36030 - MONTECCHIO PRECALCINO (VI) - ITALY
☏ +39.0445.865911 - 🖷 +39.0445.865912 - ✉ info@extraflame.it - 💻 www.lanordica-extraflame.com

MADE IN ITALY
design & production

TO FIND THE SERVICE CENTRE NEAREST TO YOU CONTACT YOUR DEALER OR CONSULT THE SITE WWW.LANORDICA-EXTRAFLAME.COM

The manufacturer reserves the right to vary the characteristics and the data reported in this pamphlet at any moment and without notice, in order to improve its products.
This manual, therefore, cannot be regarded as a contract towards other parties.