Extraflame®

Riscaldamento a Pellet

UK

THERMO PRODUCTS USER MANUAL

DIADEMA IDRO - LILIANA IDRO

MADE IN ITALY
design & production

004276528 - REV 009

⚠ ATTENTION

SURFACES CAN BECOME VERY HOT!
ALWAYS USE PROTECTIVE GLOVES!

During combustion, thermal energy is released that significantly increases the heat of surfaces, doors, handles, controls, glass, exhaust pipes, and even the front of the appliance. Avoid contact with those elements if not wearing protective clothing (protective gloves included). Make sure children are aware of the danger and keep them away from the stove during operation.

ENGLISH **5**

WARNINGS **5**
SAFETY **5**
ROUTINE MAINTENANCE **7**
HYDRAULIC SYSTEM **8**
INSTALLATION AND SAFETY DEVICES 8
ANTI-CONDENSATION DEVICE (MANDATORY) **9**
STOVE POSITIONING 10
REARMS **10**
FEATURES **10**
INSTALLATION **11**
MINIMUM DISTANCES 11
PREPARATIONS FOR MAINTENANCE 11
PELLETS AND FEEDING **13**
CHECKS AND PRECAUTIONS FOR FIRST IGNITION **13**
THE PELLET LOADING MOTOR DOES NOT WORK: 13
CONTROL PANEL **14**
DISPLAY ICONS KEY 14
GENERAL MENU **15**
BASIC INSTRUCTIONS 15
THE REMOTE CONTROL **16**
ENABLE DELAYED SWITCH-OFF 16
TYPE AND REPLACEMENT OF BATTERIES 16
COMMISSIONING SETTINGS **17**
MAINS FREQUENCY 50/ 60HZ 17
ADJUSTING TIME, DAY, MONTH AND YEAR 17
ADJUSTING LANGUAGE 17
OTHER FUNCTIONS **17**
AIR DISCHARGE 17
FIRST LOAD 17
OPERATION AND LOGIC **18**
ADDITIONAL THERMOSTAT **19**
ADDITIONAL THERMOSTAT FUNCTIONING WITH STBY ACTIVE 19
ADDITIONAL THERMOSTAT FUNCTIONING WITH STBY DEACTIVATED 19
ADDITIONAL THERMOSTAT INSTALLATION 19
SET POWER **20**
TEMPERATURE SET **20**
USER MENU **20**
BURN POT CLEANING 20
RESET 20
LOW 21
SET CHRONO **21**
STATUS **22**
SETTINGS **22**
SET CLOCK 22
ADJUSTING LANGUAGE 22
DISPLAY 22
STAND - BY 23
AUX **23**
CLEANING AND MAINTENANCE **24**
MAINTENANCE **24**
CLEANING AND MAINTENANCE BY THE USER 24
ROUTINE MAINTENANCE PERFORMED BY QUALIFIED TECHNICIANS **26**
DECOMMISSIONING (END OF SEASON) 26
DISPLAYS **28**
ALARMS **28**
GUARANTEE TERMS **30**
DISPOSAL **31**

LILIANA

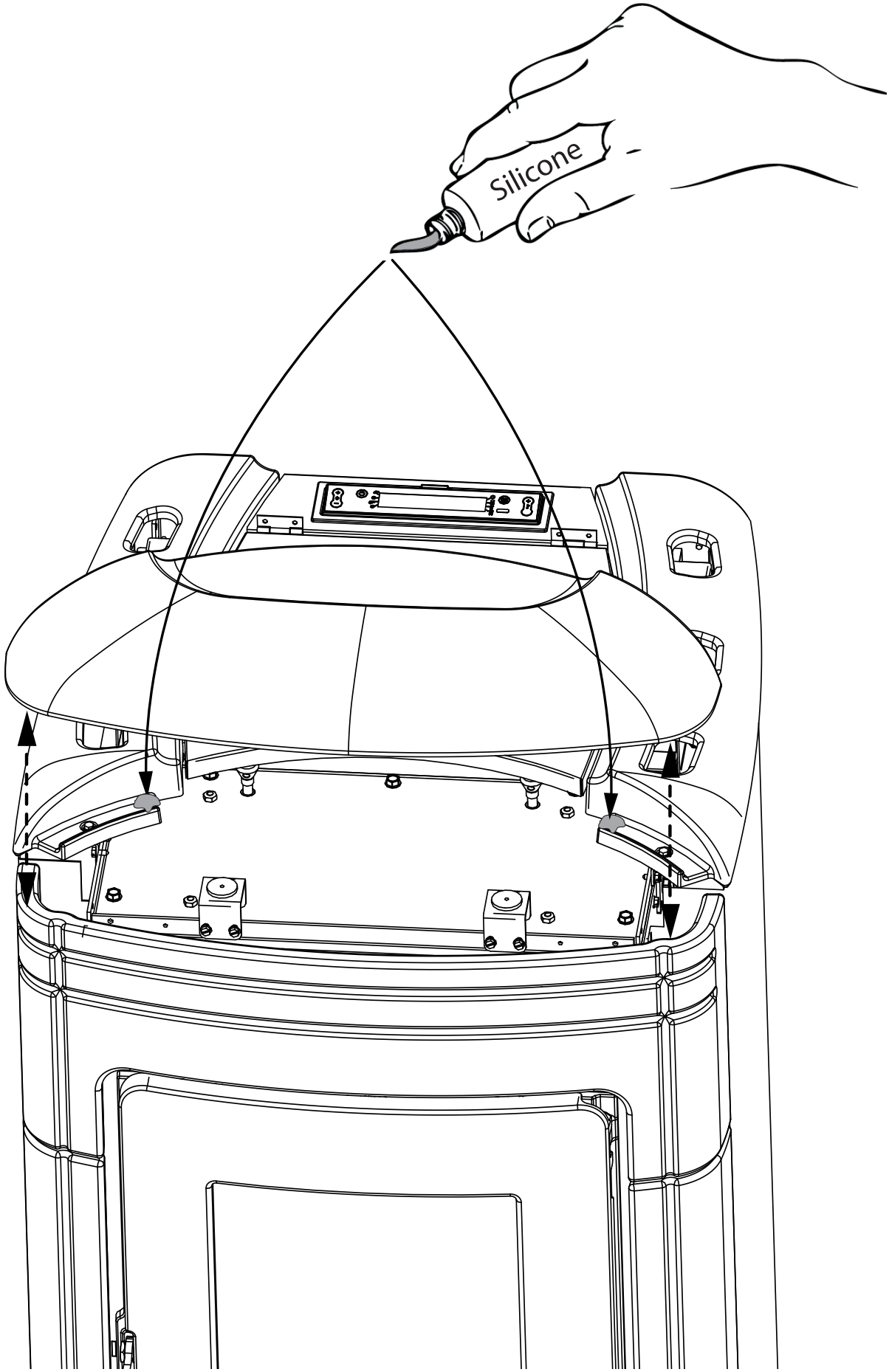

We thank you for having chosen our company; our product is a great heating solution developed from the most advanced technology with top quality machining and modern design, aimed at making you enjoy the fantastic sensation that the heat of a flame gives, in complete safety.

WARNINGS

This instructions manual is an integral part of the product: make sure that it always accompanies the appliance, even if transferred to another owner or user, or if transferred to another place. If it is damaged or lost, request another copy from the area technician. This product is intended for the use for which it has been expressly designed. The manufacturer is exempt from any liability, contractual and extracontractual, for injury/damage caused to persons/animals and objects, due to installation, adjustment and maintenance errors and improper use.
Installation must be performed by qualified staff, which assumes complete responsibility for the definitive installation and consequent good functioning of the product installed. One must also bear in mind all laws and national, regional, provincial and town council Standards present in the country in which the appliance has been installed, as well as the instructions contained in this manual.
The Manufacturer cannot be held responsible for the failure to comply with such precautions.
After removing the packaging, ensure that the content is intact and complete. Otherwise, contact the dealer where the appliance was purchased.
All electric components that make up the product must be replaced with original spare parts exclusively by an authorised after-sales centre, thus guaranteeing correct functioning.

SAFETY

- **THE APPLIANCE MAY BE USED BY CHILDREN 8 YEARS OF AGE OR OLDER AND INDIVIDUALS WITH REDUCED PHYSICAL, SENSORY, OR MENTAL CAPACITIES OR WITHOUT EXPERIENCE OR THE NECESSARY KNOWLEDGE, PROVIDED THAT THEY ARE SUPERVISED OR HAVE RECEIVED INSTRUCTIONS ON SAFE USE OF THE APPLIANCE AND THAT THEY UNDERSTAND THE INHERENT DANGERS.**
- **THE GENERATOR MUST NOT BE USED BY PERSONS (INCLUDING**

CHILDREN) WITH REDUCED PHYSICAL, SENSORY AND MENTAL CAPACITIES OR WHO ARE UNSKILLED PERSONS, UNLESS THEY ARE SUPERVISED AND TRAINED REGARDING USE OF THE APPLIANCE BY A PERSON RESPONSIBLE FOR THEIR SAFETY.

- THE CLEANING AND MAINTENANCE REQUIRED BY THE USER MUST NOT BE PERFORMED BY CHILDREN WITHOUT SUPERVISION.
- CHILDREN MUST BE CHECKED TO ENSURE THAT THEY DO NOT PLAY WITH THE APPLIANCE.
- DO NOT TOUCH THE GENERATOR WHEN YOU ARE BAREFOOT OR WHEN PARTS OF THE BODY ARE WET OR DAMP.
- THE SAFETY AND ADJUSTMENT DEVICES MUST NOT BE MODIFIED WITHOUT THE AUTHORISATION OR INDICATIONS OF THE MANUFACTURER.
- DO NOT PULL, REMOVE, TWIST THE ELECTRICAL CABLES COMING OUT OF THE PRODUCT EVEN IF IT IS DISCONNECTED FROM THE MAINS.
- IT IS ADVISED TO POSITION THE POWER SUPPLY CABLE SO THAT IT DOES NOT COME INTO CONTACT WITH HOT PARTS OF THE APPLIANCE.
- THE POWER SUPPLY PLUG MUST BE ACCESSIBLE AFTER INSTALLATION.
- DO NOT CLOSE OR REDUCE THE DIMENSIONS OF THE AIRING VENTS IN THE PLACE OF INSTALLATION. THE AIRING VENTS ARE ESSENTIAL FOR CORRECT COMBUSTION.
- DO NOT LEAVE THE PACKAGING ELEMENTS WITHIN REACH OF CHILDREN OR UNASSISTED DISABLED PERSONS.
- THE HEARTH DOOR MUST ALWAYS BE CLOSED DURING NORMAL FUNCTIONING OF THE PRODUCT.
- WHEN THE APPLIANCE IS FUNCTIONING AND HOT TO THE TOUCH, ESPECIALLY ALL EXTERNAL SURFACES, ATTENTION MUST BE PAID
- CHECK FOR THE PRESENCE OF ANY OBSTRUCTIONS BEFORE SWITCHING THE APPLIANCE ON FOLLOWING A PROLONGED PERIOD OF INACTIVITY.
- THE GENERATOR HAS BEEN DESIGNED TO FUNCTION IN ANY CLIMATIC CONDITION. IN PARTICULARLY ADVERSE CONDITIONS (STRONG WIND, FREEZING) SAFETY SYSTEMS MAY INTERVENE THAT SWITCH THE GENERATOR OFF. IF THIS OCCURS, CONTACT THE TECHNICAL AFTER-SALES SERVICE AND ALWAYS DISABLE THE SAFETY

SYSTEMS.

- **IN THE EVENT THE FLUE CATCHES FIRE, USE SUITABLE SYSTEMS FOR SUFFOCATING THE FLAMES OR REQUEST HELP FROM THE FIRE BRIGADE.**
- **THIS APPLIANCE MUST NOT BE USED TO BURN WASTE**
- **DO NOT USE ANY FLAMMABLE LIQUIDS FOR IGNITION**
- **DURING THE FILLING PHASE DO NOT PUT THE BAG OF PELLETS TO INTO CONTACT WITH THE PRODUCT**
- **THE MAJOLICAS ARE TOP QUALITY ARTISAN PRODUCTS AND AS SUCH CAN HAVE MICRO-DOTS, CRACKLES AND CHROMATIC IMPERFECTIONS. THESE FEATURES HIGHLIGHT THEIR VALUABLE NATURE. DUE TO THEIR DIFFERENT DILATION COEFFICIENT, THEY PRODUCE CRACKLING, WHICH DEMONSTRATE THEIR EFFECTIVE AUTHENTICITY. TO CLEAN THE MAJOLICAS, IT IS RECOMMENDED TO USE A SOFT, DRY CLOTH. IF A DETERGENT OR LIQUID IS USED, THE LATTER COULD PENETRATE INSIDE THE CRACKLES, HIGHLIGHTING THEM.**
- **SINCE THE PRODUCT CAN TURN ON AUTOMATICALLY THANKS TO THE TIMER, OR REMOTELY USING THE DEDICATED APPLICATIONS, IT IS STRICTLY FORBIDDEN TO LEAVE ANY COMBUSTIBLE OBJECT WITHIN THE SAFETY DISTANCES INDICATED ON THE TECHNICAL DATA PLATE.**

ROUTINE MAINTENANCE

Based on Decree 22 January 2008 n°37 art.2, routine maintenance means interventions aimed at reducing degradation due to normal use, as well as dealing with accidental events entailing the need of first interventions, which however do not modify the structure of the system upon which one is intervening or its intended use according to the requirements laid down by the technical standards in force and by the manufacturer's use and maintenance manual.

HYDRAULIC SYSTEM

Certain concepts referring to the Italian Standard UNI 10412-2 (2009) are described in this chapter.
As previously described, when installing, all national, regional, provincial and council Standards in force provided by the country in which the appliance has been installed must be complied with.
During installation of the generator it is MANDATORY to adjust the system with a manometer in order to display the water pressure.

TABLE OF SAFETY DEVICES FOR CLOSED VESSEL SYSTEM AND NOT PRESENT IN THE PRODUCT	
Safety valve	✓
Pump control thermostat (it is managed by the water probe and the board program)	✓
Water temperature indicator (display)	✓
Pressure transducer with display	✓
Automatic circuit breaker adjustment switch (managed by board program)	✓
Pressure transducer with minimum and maximum pressure switch alarm	✓
Water overheating automatic circuit breaker switch (block thermostat)	✓
Circulation system (pump)	✓
Expansion system	✓

Pay attention to the correct sizing of the system:

- generator power compared to the thermal requirement
- possible need for a buffer tank

INSTALLATION AND SAFETY DEVICES

The installation, relative system connections, commissioning and inspection of correct functioning must be carried out perfectly, in full compliance with Standards in force, national, regional and municipal, as well as these instructions. For Italy, installation must be carried out by professionally qualified staff (Ministerial Decree dated 22.01.08 n°37).
Extraflame S.p.A. declines all responsibility for damage to objects and/or persons caused by the system.

TYPE OF SYSTEM

- There are 2 different types of system:
- Open vessel system and closed vessel system.
- The product has been designed and made to work with closed vessel systems.

CHECK THAT THE PRELOAD OF THE EXPANSION VESSEL IS SET TO 1.5 BAR.

SAFETY DEVICES FOR CLOSED VESSEL SYSTEM

In accordance with the UNI 10412-2 (2009) regulation in force in Italy, all the closed systems must be fitted with: safety valve, pump control thermostat, temperature indicator, pressure indicator, automatic circuit breaker block switch (block thermostat), circulation system, expansion system, and safety dissipation built-in to the generator with thermal safety valve (self-activated), if the appliance does not have a temperature self-adjustment system.

DISTANCES OF SAFETY DEVICES ACCORDING TO THE STANDARD

The temperature safety sensors must be in place on the machine at a distance no greater than 30 cm from the flow connection. Whenever the generators lack a device, those missing can be installed on the generator flow pipe, within a distance no greater than 1 m from the machine.

COMMISSIONING CHECKS

Before connecting the boiler:
a) wash all system piping thoroughly in order to remove any residues which might compromise the correct functioning of certain system components (pumps, valves, etc.).
b) The company recommends installing a magnetic filter in the generator return, to increase the operational life of the boiler, make it easier to remove impurities and increase the overall efficiency of the system.
It is also advisable to perform an inspection using appropriate instruments, to check for any stray currents that may cause corrosion.
c) check to verify that the flue has adequate draught, that it is not narrowed and that other appliances do not discharge into the flue. This is to prevent unexpected power increases. The flue fitting can be mounted between the boiler and the flue only after this inspection. An inspection of the connections with pre-existing flues is recommended.

ANTI-CONDENSATION DEVICE (MANDATORY)

Make sure a suitable anti-condensate circuit has been realised, which guarantees an appliance return temperature of at least 55°C. The automatic thermostatic valve, for instance, is used in solid fuel boilers as it prevents cold water from returning into the exchanger. A high return temperature allows efficiency improvement, reduces formation of smoke condensation and prolongs the generator's life span. The manufacturer recommends using the 55°C model with 1" hydraulic connections.

For the products with the *PWM pump control thermostat, installation is considered equivalent to the realisation of a suitable anti-condensate circuit in the case where::
- the heat generator pump is the only one in the installation, or
- there is a plate heat exchanger between the heat generator and the installation, or
- there is a hydraulic compensator or an inertial storage tank (buffer) between the heat generator and the installation

***Check technical data sheet on website.**
Valve on sale as an accessory (optional)

STOVE POSITIONING

For correct product functioning, it is recommended to position it so that it is perfectly level, using a spirit level.

REARMS

The figures below illustrate the positions of the tank (85°C) and H2O (100°C) rearms. Contact the qualified technician if one of the rearms should be triggered, so as to verify the cause.

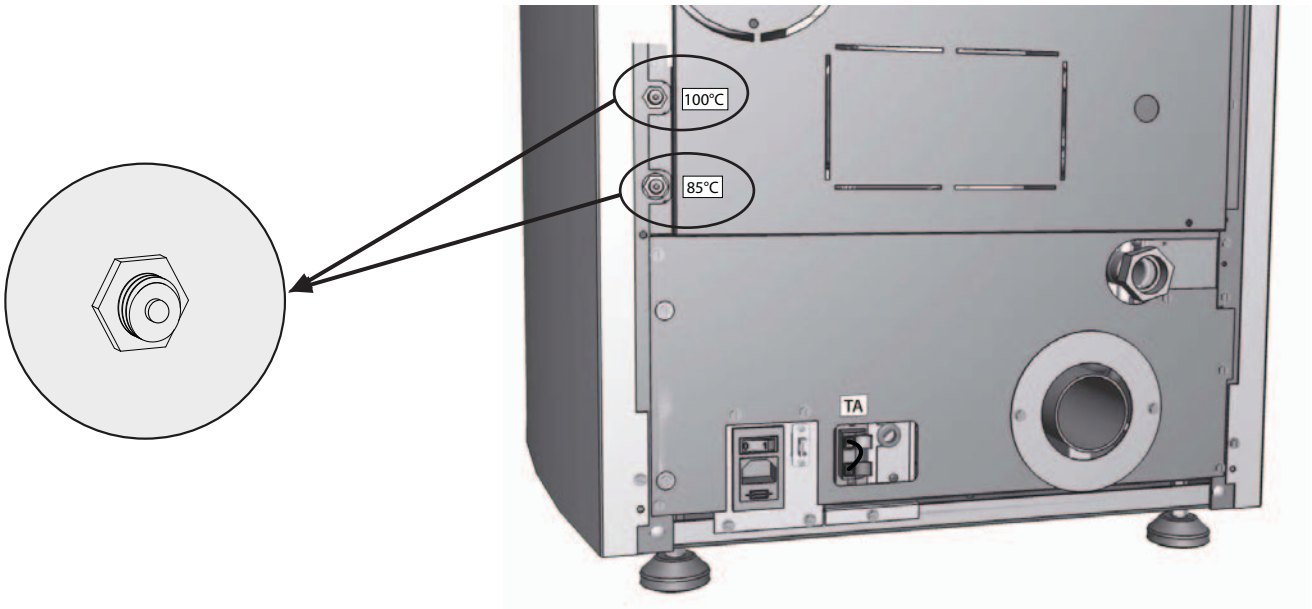

FEATURES

	LILIANA IDRO DIADEMA IDRO
Water content of the thermo-product heat exchanger (l)	21
Volume of expansion vessel integrated in the thermo-product (l)	8 *
3 bar safety valve integrated in the thermo-product	SI
Minimum and maximum pressure switch integrated into the thermo-product	SI
Pump integrated into the thermo-product	SI
Pump max. head (m)	6

* **ENVISION A POSSIBLE ADDITIONAL EXPANSION VESSEL DEPENDING ON THE SYSTEM WATER CONTENT.**

The diagram to the side illustrates the behaviour of the pump used on our thermo-products at the speeds that can be set.

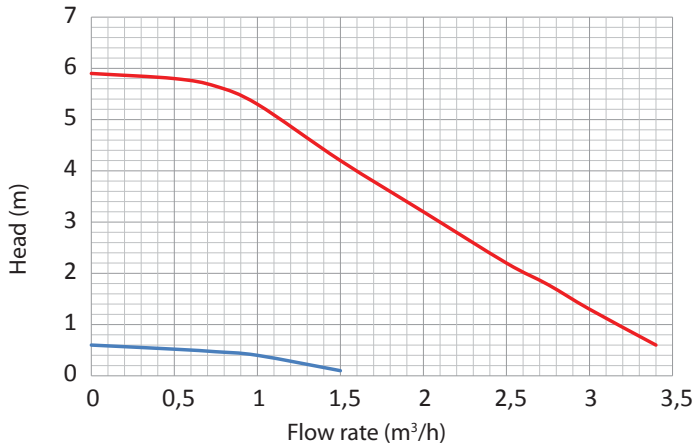

INSTALLATION

GENERAL

The flue gas exhaust and hydraulic connections must be carried out by qualified personnel who must issue installation conformity documentation compliant with national standards.
The installer must provide the owner or person acting for him, according to the legislation in force, with the declaration of conformity, supplied with:

1) the use and maintenance manual of the appliance and of the system components (such as for example, the smoke ducts, chimney, etc.);
2) photocopy or photograph of the chimney plaque;
3) system booklet (where applicable).

The installer must ask to be issued with a receipt stating that the documentation has been provided, and must keep it with a copy of the technical documentation relating to the installation.
For installation in a condominium, prior approval from the condominium's administrator must be requested.
Where required, check the exhaust gas emissions after installation. Should a sampling point be installed, it must be airtight.

COMPATIBILITY

Do not install in rooms with a fire hazard. It is also forbidden to install it in living areas with the following characteristics:

1. where there are liquid fuel appliances with continuous or discontinuous operation that draw the combustion air into the room in which they are installed.
2. where there are type B gas appliances intended for heating, with or without domestic hot water production and in adjacent and communicating rooms.
3. where the depression measured in situ between the external and internal environment is greater than 4 Pa.

N.B.: Watertight appliances can also be installed in the cases indicated in points 1, 2 and 3 of this paragraph.

INSTALLATIONS IN BATHROOMS, BEDROOMS AND STUDIO FLATS

Installation in bathrooms, bedrooms and studio flats is only allowed for sealed or closed hearth appliances with ducted combustion air taken from the outside.

POSITIONING AND SAFETY DISTANCES

The support surfaces and/or points must have a suitable capacity to bear the overall weight of the appliance, accessories and coverings. If the floor is made of a combustible material, we recommend using a non-combustible material to protect the front part from any burnt material which might fall during routine cleaning operations. The generator must be level to function properly. The side walls, the rear walls and the floor support surface should be made of non-combustible material.

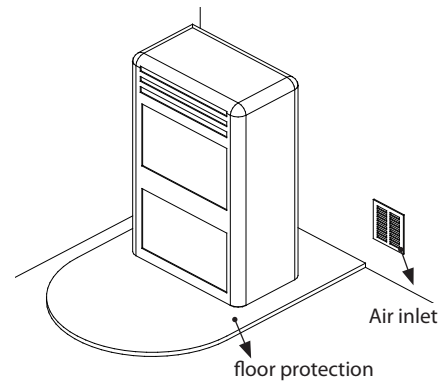

One must also bear in mind all laws and national, regional, provincial and town council regulations in force in the country in which the appliance has been installed, as well as the instructions contained in this manual.

MINIMUM DISTANCES

Installation next to flammable or heat-sensitive materials is permitted **only if the special safety distances specified on the label at the beginning of the manual (pag.2) are observed**. If the materials are not flammable, you must keep a side and rear distance of at least 100 mm (without the inserts). For products equipped with rear spacers, wall-mounting installation is permitted exclusively for the rear side.

PREPARATIONS FOR MAINTENANCE

To carry out extraordinary maintenance operations on the product, it may be necessary to move it away from the adjacent walls. This must be done by a technician authorised to disconnect the combustion product evacuation ducts and then reconnect them. For heaters connected to the hydraulic system, the connection between the system itself and the product must be made in such a way that, when an authorised technician is about to carry out extraordinary maintenance operations, it is possible to move the heater at least 1 metre away from the adjacent walls.

INSTALLING INSERTS

When installing inserts, access must be prevented to the internal parts of the appliance and it must not be possible to access live parts during extraction operations.
Any wiring, for example the power cable or room probe, must be positioned so as not to be damaged during movement of the insert and must not come into contact with hot parts. If a cavity made of combustible material is installed, we recommend taking all the safety precautions indicated by the installation standards.

VENTILATION AND AERATION OF INSTALLATION ROOMS

Ventilation in the event of a non-hermetic generator and/or of non-sealed installation must take place respecting the minimum area indicated below:

Appliance categories	Reference standard	Percentage of the net opening section with respect to the appliance fumes outlet section	Minimum net opening value of the ventilation duct
Pellet stoves	UNI EN 14785	-	80 cm²
Boilers	UNI EN 303-5	50%	100 cm²

Under any condition, including in the presence of extractor hoods and/or of controlled forced ventilation systems, the pressure difference between the generator installation rooms and the outside must always be equal to or less than 4 Pa.

In the presence of type B gas appliances with intermittent operation not intended for heating, they must have their own aeration and/or ventilation opening.

The air inlets must meet the following requirements:
- they must be protected with grids, metal mesh, etc., but without reducing the net useful section;
- they must be made so as to make the maintenance operations possible;
- positioned so that they cannot be obstructed;

The clean and non-contaminated air flow can also be obtained from a room adjacent to that of installation (indirect aeration and ventilation), as long as the flow takes place freely through permanent openings communicating with the outside.
The adjacent room cannot be used as a garage, or to store combustible material or for any other activity with a fire hazard, bathroom, bedroom or common room of the building.

FLUE GAS EXHAUST

The heat generator works in depression and is equipped with an outlet fan for flue gas extraction. There must be a single exhaust system for the generator. Using a flue that is shared with other devices is not allowed.

The components of the flue gas exhaust system must be chosen in relation to the type of appliance to be installed in compliance with:
- UNI/ TS 11278 in the event of metal chimneys, with particular attention to that stated in the specification;
- UNI EN 13063-1 and UNI EN 13063-2, UNI EN 1457, UNI EN 1806 in the event of non-metallic chimneys.
- The length of the horizontal section must be minimal and, in any case, no longer than 3 metres, with a minimum upward slope of 3%
- There must not be more than 4 direction changes including the one due to the use of the "T" element.
- A "T" fitting with a condensation collection cap must be provided at the base of the vertical section.
- If the exhaust is not inserted in an existing flue, a vertical section with a windproof end piece is required (UNI 10683).
- The vertical duct can be inside or outside the building. If the smoke duct is inserted in an existing flue, it must be certified for solid fuel.
- If the smoke duct is outside the building, it must always be insulated.
- The smoke ducts must have at least one airtight inlet for flue gas sampling.
- All the sections of the flue gas duct must be accessible to inspection.
- Inspection openings must be provided for cleaning.
- If the generator has a fume temperature lower than 160°C+ ambient temperature caused by the high yield (contact technicians) it MUST be resistant to humidity.
- A flue system that does not respect the previous points or, in general, that does not comply with the regulations, may cause condensation phenomena inside it.

CHIMNEY CAP

The chimney caps must meet the following requirements:
- they must have a useful outlet section no less than double that of the chimney/ducted system on which it is installed;
- they must be adapted in order to prevent the penetration of rain and snow in the chimney/ducted system;
- they must be built so that, in the event of winds coming from all directions and from any angle, the expulsion of combustion products is in any case ensured;

EXAMPLES OF CORRECT CONNECTION TO THE CHIMNEY

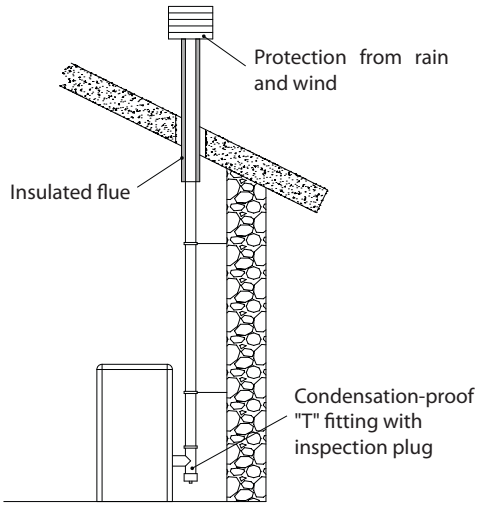

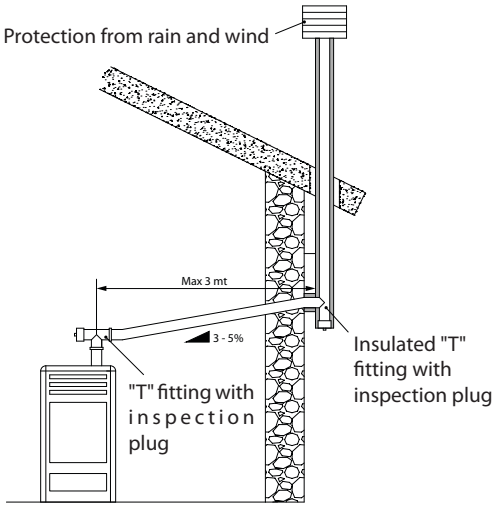

CONNECTION TO THE MAINS ELECTRIC SUPPLY
The generator is supplied with an electric power cable to be plugged into a 230V 50 Hz socket, possibly with a circuit breaker switch. The socket must be easily accessible.
The electrical system must be compliant with standards. The efficiency of the earthing circuit must be checked. Unsuitable earthing of the system can cause malfunctioning for which the manufacturer will not be held liable.
Power supply variations beyond 10% can cause faulty operation of the product.

PELLETS AND FEEDING

Pellets are made by applying high pressure to sawdust, or wood waste products (not containing paint) from sawmills, carpentry and other activities related to processing and working with wood.

Given that it does not use any glue to hold it together this type of fuel is completely environmentally friendly. In fact the compactness of the pellets over time is guaranteed by a natural substance found in the wood itself: wood coal. In addition to being an environmentally friendly fuel in that it pushes wood residues to the limits pellets also have technical advantages.
While wood has a calorific value of 4.4kWh/kg. (with 15% humidity after around 18 months of seasoning) the calorific value of pellets is 5 kWh/kg.
Pellet density is 650kg/m3 and the water content is equal to 8% of its weight. For this reason they do not require seasoning in order to arrive at a sufficiently adequate degree of heat yield.

The pellets used must comply with the characteristics described by the following standards:

EN PLUS class A1, ISO 17225-2 class A1
and
UNI EN 303-5 with the following characteristics: water content ≤ 12%, ash content ≤ 0.5% and lower calorific value >17 MJ/kg (in the case of boilers).

The manufacturer always recommended using pellets with a diameter of 6 mm with its products.

PELLET STORAGE
In order to ensure problem-free combustion pellets must be stored in a dry place.
Open the tank lid and load the pellets using a scoop.

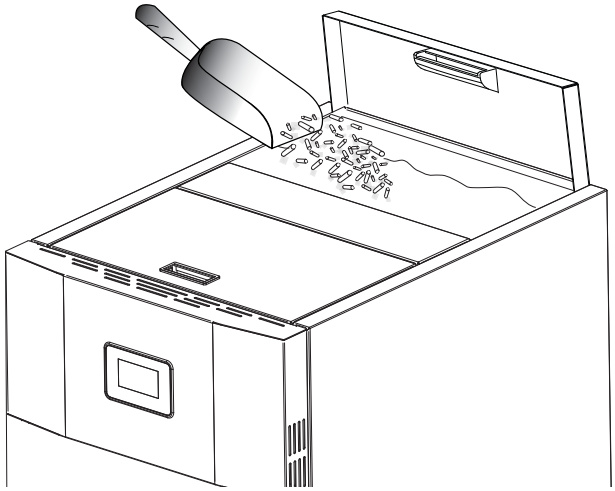

THE USE OF EXPIRED PELLETS OR ANY OTHER MATERIAL WILL AFFECT THE FUNCTIONALITY OF YOUR GENERATOR AND MAY LEAD TO THE TERMINATION OF THE WARRANTY AND CESSATION OF ANY ACCOMPANYING RESPONSIBILITY ON THE PART OF THE MANUFACTURER

CHECKS AND PRECAUTIONS FOR FIRST IGNITION

IMPORTANT!
IN ORDER FOR THE GENERATOR TO WORK PROPERLY, THE HYDRAULIC SYSTEM'S PRESSURE MUST BE BETWEEN 0.6 AND 2.5 BAR.

If the pressure detected by the digital pressure switch is below 0.6 or above 2.5 bar, it triggers a boiler alarm.
Bringing the water pressure within the standard values, it is possible to reset the alarm by pressing the button ⏻/1 for 3 seconds
(The alarm can be reset only if the fumes motor has stopped and 15 minutes have elapsed from the display of the alarm)

THE PELLET LOADING MOTOR DOES NOT WORK:

Due to the filling of the system, it is normal that there is air inside the circuit.
During the 1st ignition cycle, water movement causes the displacement of air bubbles and their out-flow from the automatic vents out of the system. This can cause the pressure to drop and activate the minimum pressure switch, which stops the motor that transports the pellets and, therefore, the heat generator.

Vent out the system, if necessary even multiple times, to remove the air, and reload it if the pressure is too low.
It is not a malfunction, but a normal occurrence due to its filling. After filling, the plumber must always thoroughly vent the system, using the special vents in the circuit and running the "air breather" function on the machine. (After the first ignition and with a cold machine, re-activate the function "air breather" - see chapter "OTHER FUNCTIONS")

BULB THERMOSTATS - RESET:

Check by pressing the reset buttons (85 - 100°C) located on the back of the appliance, before contacting a technician (see section RESET).

CONTROL PANEL

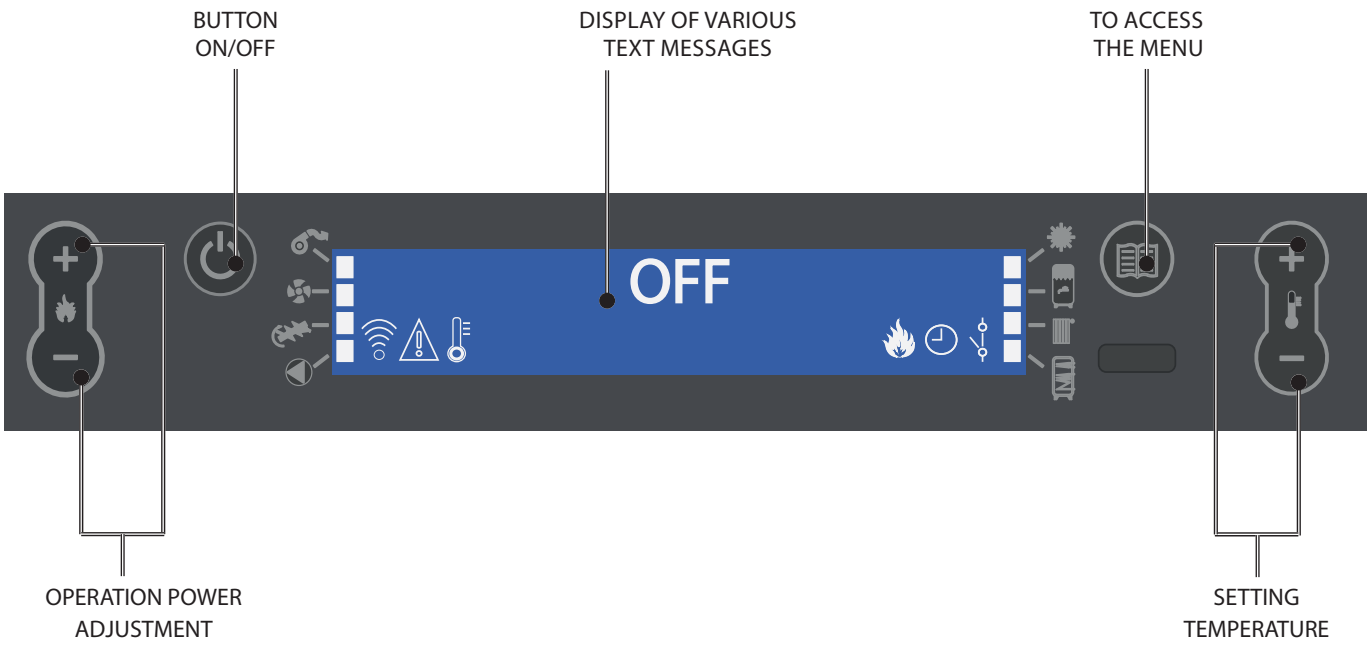

DISPLAY ICONS KEY			
	Indicates the receipt of the radio signal On = during radio communication Off = no radio communication Flashing = serial port excluded		Indicates the stove modulation On = the stove is working at the set power Flashing = the power at which the stove is working is different to the power set, the stove is modulating (for various reasons)
	Indicates the presence of an alarm. On: indicates the presence of an alarm Off: indicates the absence of alarms Flashing: indicates the deactivation of the depression sensor.		It indicates weekly programming functioning Indicator on = weekly programming active Indicator off = weekly programming disabled
	Indicates the water temperature status Off = the T° read by the probe is above the set temperature On = the T° read by the probe is below the set temperature		Indicates the contact of the external additional thermostat Contact closed: the contact of the external additional thermostat is closed and the STBY function is disabled. Contact open: the contact of the external additional thermostat is open and the STBY function is disabled. Flashing with contact closed: the contact of the external additional thermostat is closed and the STBY function is activated Flashing with contact open: the contact of the external additional thermostat is open and the STBY function is activated
	It indicates fumes motor operation. Off = fumes motor disabled On = fumes motor active Flashing = breakdown (contact technical after-sales service)		It indicates the summer/winter function Off: Activates the winter function On: Activates the summer function
	Not used		Indicates the DHW request Off: DHW satisfied, pump off Flashing : the DHW request exists but the work conditions are not satisfied, pump off On : the DHW is in request mode and the work conditions are satisfied, pump on
	It indicates pellet feed motor operation Off = pellet feed motor disabled On = pellet feed motor active		Indicates the heating request Off : heating satisfied, pump off Flashing : the heating request exists but the work conditions are not satisfied, pump off On : the heating is in request mode and the work conditions are satisfied, pump on
	It indicates pump operation Off = pump deactivated On = pump active Flashing = the safety device is active (H2O temperature > 85°C)		Indicates the puffer request, if active. Off : puffer satisfied, pump off Flashing : the puffer request exists but the work conditions are not satisfied, pump off On : the puffer is in request mode and the work conditions are satisfied, pump on

GENERAL MENU

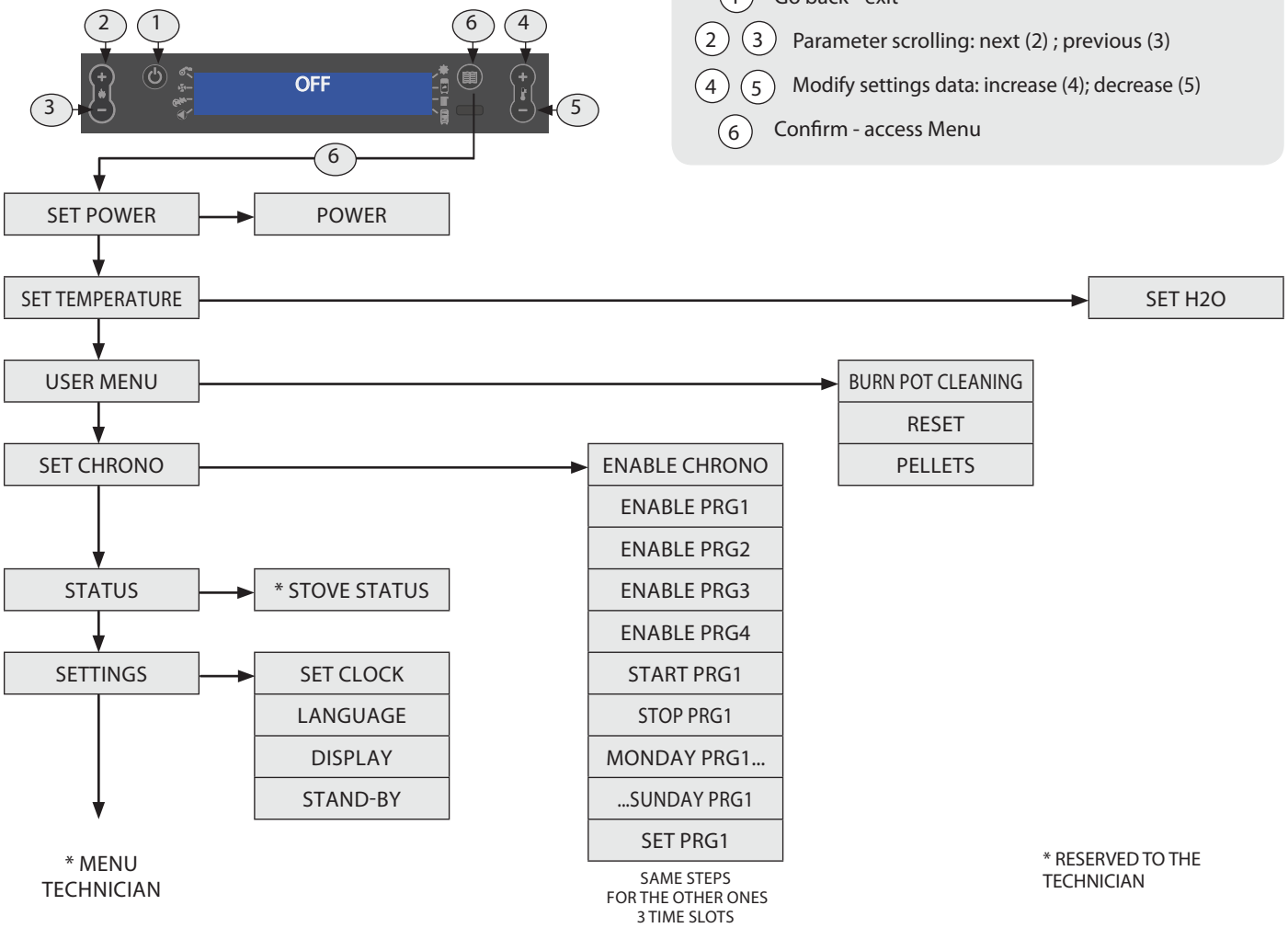

BASIC INSTRUCTIONS

The following recommendations must be followed the first times the stove is ignited:

- Faint smells may be produced due to the drying of the paints and silicones used. Do not remain in the environment for long periods.
- Do not touch the surfaces as they could still be unstable.
- Air the room well several times.
- The hardening of the surfaces is terminated after several heating processes.
- This appliance must not be used to burn waste.

Before lighting the stove, the following points must be verified:

- The hydraulic system must be completed in compliance with the guidelines of the regulations and the manual.
- The tank must be full of pellets.
- The combustion chamber must be clean.
- The burn pot must be completely free and clean.
- Check the hermetic closure of the fire door and the ash drawer.
- Check that the power supply cable is connected correctly.
- The bipolar switch in the rear right part must be positioned on 1.

The company has an optional additional board that allows the boiler the following further functions when managing the system. The table below indicates the various possibilities that the optional can offer.

DHW Storage Management	✓
Puffer Management	✓
3 heating areas	✓
Instant DHW option	✓
Puffer pump or 4th heating area management	✓
Anti-legionella management for DHW storage	✓
DHW storage chrono management	✓
Auxiliary output management and control	✓

THE REMOTE CONTROL

All that can normally be implemented through the LCD can be adjusted using the remote control.
The table below provides a detailed description of the various functions:

1	ON / OFF	Pressing the key for three seconds, the stove will switch on or off
2	POWER INCREASE	Pressing the key will increase the operating power
3	POWER DECREASE	Pressing the key will decrease the operating power
4	T° INCREASE	The temperature setting can be increased by pressing this key
5	T° DECREASE	The set temperature can be decreased by pressing this key
6	ENABLE / DISABLE CHRONO	Pressing the key once will enable or disable the chrono
7	ENABLE DELAYED SWITCH-OFF	The delayed switch-off can be set by pressing this key. For example, if the stove is set to switch-off in an hour, it shall switch-off automatically once the set time elapses, displaying the countdown every minute for delayed automatic shutdown.
8	MENU	This key allows the user to access the user and technical menu (the technical menu is reserved for assistance)
9	INCREASE	The temperature setting can be increased by pressing this key
10	ESC KEY	The key allows the user to exit any program or display and returns to the main menu without saving the data
11	BACK	The key returns to the display of the various menus
12	CONFIRMATION KEY	This key confirms the adjustments made during the user menu programming phase
13	FORWARD	The key allows the user to go forward in the various menus
14	ENABLE FUNCTION F1	Pre-set key for future applications
15	DECREASE	The key decreases the value to be set
16	STOVE STATUS	Pressing this key will display the general status of the stove

Important note: the numbers shown on the remote control are purely indicative and are not present on the remote control supplied with the product.

TYPE AND REPLACEMENT OF BATTERIES

The batteries are housed in the lower part of the remote control.
To replace it, you need to take out the battery holder, remove or insert the battery following the symbols on the remote control and on the battery.
For operation, 1 CR2025, 3V lithium buffer battery is required.

The batteries used contain metals harmful for the environment. They must therefore be disposed of separately in appropriate containers.

IF THE REMOTE CONTROL IS OFF BECAUSE IT HAS NO BATTERIES, THE STOVE CAN BE CONTROLLED FROM THE CONTROL PANEL ON TOP OF IT. WHILE REPLACING THE BATTERY, PAY ATTENTION TO THE POLARITY BY OBSERVING THE SYMBOL ON THE INSIDE COMPARTMENT OF THE REMOTE CONTROL.

ALL CLEAN CHECK UP

SHOULD THE "ALL CLEAN CHECK UP" ALARM BE TRIGGERED, MAKE SURE THAT THE BOTTOM OF THE BURN POT IS FREE OF RESIDUES OR SCALES. THE HOLES AT THE BOTTOM MUST BE COMPLETELY FREE TO GUARANTEE CORRECT COMBUSTION. ONE CAN USE THE FUNCTION TO ADJUST COMBUSTION BASED ON THE DESCRIBED REQUIREMENTS. IF THE ALARM PERSISTS AND THE ABOVE LISTED CONDITIONS HAVE BEEN CHECKED, CONTACT THE QUALIFIED AFTER-SALES ASSISTANCE CENTRE.

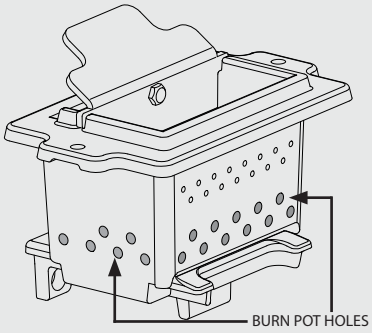

COMMISSIONING SETTINGS

Once the power cable at the back of the stove has been connected, move the switch, also located on the back, to (I).
The switch at the back of the stove powers the stove board.
The stove remains off and a first screen appears on the panel reading OFF.

MAINS FREQUENCY 50/ 60HZ

In the event the stove is installed in a country with 60Hz frequency, the stove will display "frequenza rete errata" ("mains frequency incorrect"). Vary the frequency as described below.

CONTROLS PROCEDURE

- Press key 6,
- Select the frequency required using key 4 or 5.
- Press key 6 to confirm and key 1 to return to the previous menus up to the initial status.

ADJUSTING TIME, DAY, MONTH AND YEAR

Set clock allows the user to adjust the time and date

CONTROLS PROCEDURE

- Press key 6.
- Proceed by pressing key 2 until the word **SETTINGS** is displayed.
- Confirm using key 6.
- Confirm **SET CLOCK** with key 6.
- Use keys 4 or 5 to set and key 2 to move forward, to adjust the hours, minutes, day, month and year.
- Press key 1 several times to confirm and exit the menu.

SET CLOCK	
DAY	MON, TUE, WED, ...SUN
HOURS	0...23
MINUTES	00...59
DATE	1...31
MONTH	1...12
YEAR	00...99

ADJUSTING LANGUAGE

It is possible to select the preferred language to display the various messages.

CONTROLS PROCEDURE

- Press key 6.
- Proceed by pressing key 2 until the word **SETTINGS** is displayed.
- Confirm using key 6.
- Proceed by pressing key 2 until **LANGUAGE** is displayed.
- Confirm using key 6.
- Use keys 4 or 5 to set the language.
- Press key 1 several times to confirm and exit the menu.

SET LANGUAGE	
LANGUAGE	ITALIAN
	ENGLISH
	GERMAN
	FRENCH
	SPANISH

OTHER FUNCTIONS

AIR DISCHARGE

This function allows the user to bleed any air in the stove. Once the function has been activated, the pump indicator light is activated on the display (for 15 minutes 30 seconds the pumps will be powered, alternating with 30 seconds of downtime).
To activate the function:
With the stove "OFF" press keys 1 and 4 at the same time, enter the password "77" using keys 4 and 5 and confirm with key 6.
Cut the power to interrupt.

FIRST LOAD

This function allows the user to activate the pellet feeding motor reducer for continuous functioning.
To activate the function:
When the stove is cold and "OFF" press keys 2 and 5 at the same time for a couple of seconds, the scrolling message "first load" will appear on the display.
To interrupt continuous loading simply press key 1.

OPERATION AND LOGIC

IGNITION
Once the points listed previously have been checked, press key 1 for three seconds to ignite the stove.
15 minutes are available for the ignition phase. After ignition and having reached the control temperature, the stove interrupts the ignition phase and passes to STARTING.

STARTING
During the start-up phase, the stove stabilises combustion, increasing it progressively, to then start ventilation and pass on to WORK.

WORK
During the work phase, the stove reaches the set power; see following item.

SET POWER ADJUSTMENT
Set the operating power (from 1 to 5) .
Power 1 = minimum level - Power 5 = maximum level.

SET H2O TEMPERATURE ADJUSTMENT
Set the boiler temperature between 65 - 80°C .

PUMP OPERATION
The pump activates water circulation when the temperature of the water inside the stove reaches 60°C. As the pump always functions above 60°, an always open heating area is recommended to make product functioning homogenous, preventing overheating blocks. Normally this area is defined "Safety zone".

BURN POT CLEANING
At pre-set intervals the stove performs burn pot cleaning, switching the machine off.
When the cleaning phase is finished, the stove will re-start automatically and continue its work going back to the power level selected.

MODULATION and H-OFF
As the water temperature approaches the set point, the boiler starts to modulate automatically bringing itself to the minimum power.
If the temperature increases beyond the set point, it will automatically switch off indicating **H-OFF** and will automatically go back on when the temperature drops below the set point.

SWITCH-OFF
Press key 1 for three seconds.
When the operation has been performed, the appliance automatically enters the switch-off phase, blocking the supply of pellets.
The flue gas exhaust motor will remain on until the stove temperature has dropped below the factory parameters.

RE-IGNITION
The stove can only be re-ignited automatically or manually when the cooling cycle conditions and the preset timer have been satisfied.

DO NOT USE ANY INFLAMMABLE LIQUIDS FOR IGNITION!
DO NOT ALLOW THE BAG OF PELLETS TO COME INTO CONTACT WITH THE BOILING HOT STOVE DURING THE FILLING PHASE!
IN THE EVENT OF CONTINUOUS NO IGNITION, CONTACT AN AUTHORISED TECHNICIAN.

NO IGNITION

FIRST IGNITION COULD EVEN FAIL AS THE AUGER IS EMPTY AND IS NOT ALWAYS ABLE TO LOAD THE BURN POT WITH THE REQUIRED AMOUNT OF PELLETS ON TIME TO REGULARLY START THE FLAME.
IF THE PROBLEM OCCURS AFTER ONLY A FEW MONTHS WORKING, CHECK THAT ROUTINE CLEANING STATED IN THE STOVE BOOKLET, HAS BEEN CARRIED OUT CORRECTLY.

IT IS FORBIDDEN TO USE THE APPLIANCE WITHOUT THE DIVIDER AND/ OR GLASS PROTECTION (SEE THE FIGURE TO THE SIDE). ITS REMOVAL JEOPARDISES THE SAFETY OF THE PRODUCT AND IMMEDIATELY VOIDS THE WARRANTY PERIOD. IN THE CASE OF WEAR OR DETERIORATION REQUEST AFTER-SALES ASSISTANCE FOR REPLACEMENT OF THE PART (REPLACEMENT THAT IS NOT UNDER GUARANTEE AS THE COMPONENT IS SUBJECT TO WEAR).

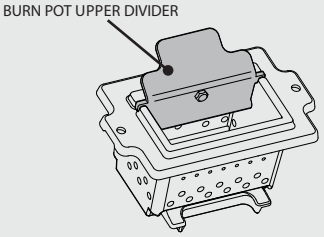

ADDITIONAL THERMOSTAT

N.B. : Installation must be performed by an authorised technician.

There is a possibility to thermostat a room adjacent to the room where the stove is positioned: just connect a thermostat following the procedure described in the next step (it is recommended to position the optional mechanical thermostat at a height of 1.50 m from the floor) . Stove functioning with the external thermostat connected in the TA clamp can be different on the basis of the activation or disabling of the STBY function.
The TA clamp leaves the factory jumpered, therefore it is always with closed contact (on request).

ADDITIONAL THERMOSTAT FUNCTIONING WITH STBY ACTIVE

When the **STBY** function is activated, the LED flashes. When the contact or external thermostat is satisfied (open contact / temperature reached), the stove will switch off. As soon as the contact or external thermostat switches to the "not satisfied" status (closed contact/ temperature to be reached) it will re-ignite.
N.B.: stove operation depends on the temperature of the water inside the stove and relative factory setting restrictions. If the stove is in H OFF (water temperature reached), any additional contact or thermostat request will be ignored.

ADDITIONAL THERMOSTAT FUNCTIONING WITH STBY DEACTIVATED

When the STBY function is disabled, the LED is fixed.
When the contact or external thermostat is satisfied (open contact / temperature reached), the stove will go to minimum. As soon as the contact or external thermostat switches to the "not satisfied" status (closed contact / temperature to be reached) the stove will start to work again at the pre-set power.
N.B.: stove operation depends on the temperature of the water inside the stove and relative factory setting restrictions. If the stove is in H OFF (water temperature reached), any additional contact or thermostat request will be ignored.

ADDITIONAL THERMOSTAT INSTALLATION

- Switch the appliance off using the master switch positioned on the rear of the stove.
- Remove the plug from the socket.
- Refer to the electrical layout to connect the two thermostat cables to the relative clamps positioned on the rear of the machine, one is red and the other black (TA clamp). **Every model can have a different position of the relative clamps in the rear of the machine. The image is given as an example.**

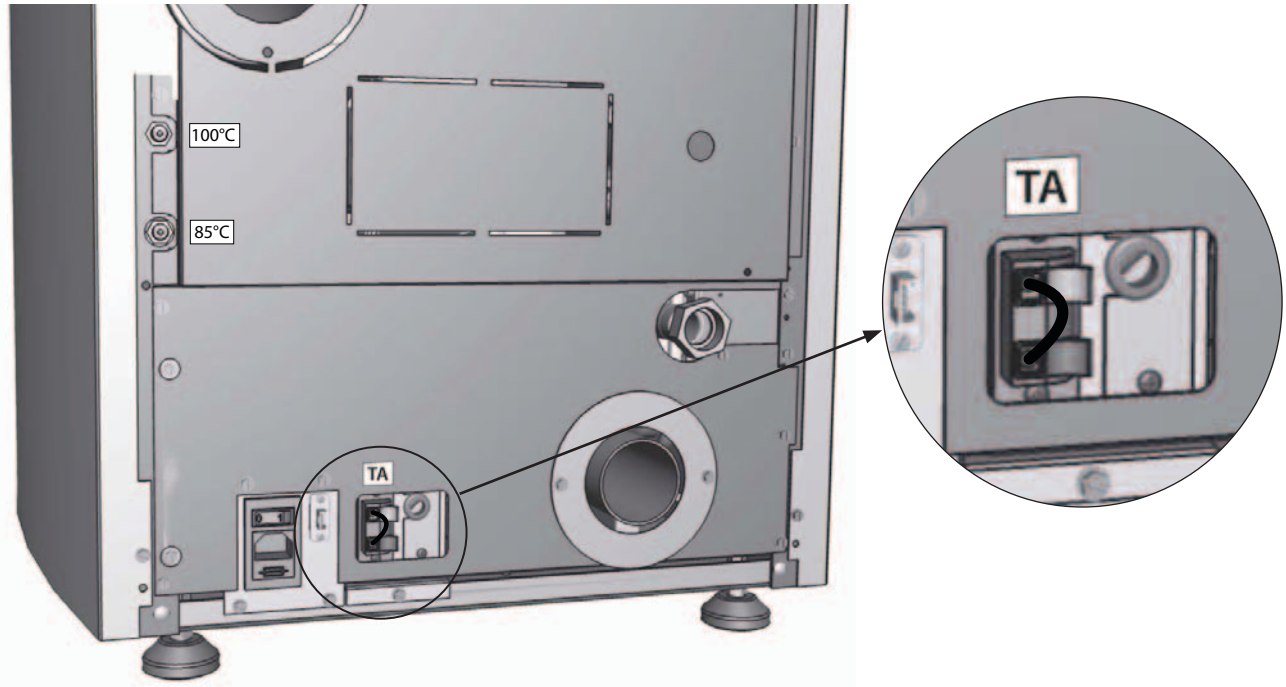

REFER TO THE "SETTINGS" CHAPTER TO ACTIVATE STAND BY

SET POWER

The following menu allows you to set the generator power Minimum power 1, maximum power 5.

CONTROLS PROCEDURE
- Press key 6.
- Confirm using key 6 - **SET POWER.**
- Use keys 4 or 5 to set the power.
- Press key 1 several times to confirm and exit the menu.

TEMPERATURE SET

The following menu allows you to set:
- The boiler temperature from 65 - 80°C.

CONTROLS PROCEDURE
- Press key 6.
- Proceed by pressing key 2 until **TEMPERATURE SET** is displayed.
- Confirm using key 6.
- Use keys 4 or 5 to set the **H2O TEMP SET**.
- Press key 1 several times to confirm and exit the menu.

USER MENU

BURN POT CLEANING

The menu allows the user to increase the frequency of the automatic burn pot cleaning.

CONTROLS PROCEDURE
- Press key 6.
- Proceed by pressing key 2 until**USER MENU** is displayed.
- Confirm using key 6.
- To increase the automatic cleaning frequency press 4.
- To go back to standard values (00) decrease by pressing 5.
- Press key 1 several times to confirm and exit the menu.

RESET

Allows the user to reset all values modifiable by the user to the default values.

CONTROLS PROCEDURE
- Press key 6.
- Proceed by pressing key 2 until **USER MENU** is displayed.
- Confirm using key 6.
- Press key 2 until **RESET**" is displayed.
- Press keys 4-5 to select **ON** and press key 6.
- "**DONE**" will appear on the display to confirm.

LOW

The following menu allows the user to adjust the percentage of pellet feed.
If the stove has functioning problems owing to the quantity of pellets, adjust pellet feeding directly from the control board.
The problems correlated to the amount of fuel can be divided into 2 categories:

NO FUEL:

- the stove can never develop a suitable flame, tending to remain very low even at high power.
- at minimum power the stove tends to almost switch-off taking the stove into "**NO PELLETS**" alarm condition.
- when the stove displays the "**NO PELLETS**" alarm, there may be non-burned pellets inside the burn pot.

EXCESS FUEL:

- the stove develops a very high flame even at low power.
- the panoramic glass is very dirty, obscuring it almost totally.
- the burn pot tends to become encrusted, blocking the holes for air intake due to the excessive pellet feed, as it is only burned partially.

The adjustment to be performed is in percentages. Therefore changing this parameter will lead to a proportional variation of all stove feeding speeds. Feeding is from -30% to +20%.

CONTROLS PROCEDURE
- Press key 6.
- Proceed by pressing key 2 until **USER MENU** is displayed.
- Confirm using key 6.
- Press key 2 until "**PELLET**" is displayed.
- Use keys 4 - increase 5 to (4) or decrease (5) the load during the WORK stage.
- Press key 1 several times to confirm and exit the menu.

SET CHRONO

This stage is used to program when the generator automatically turns on and off.
The factory setting for **SET CRONO** is disabled on the generator.

The chrono allows the user to program 4 time spans within a day to use every day of the week.
The switch-on and switch-off time can be set in every time slot, along with the days of use of the programmed time slot and the desired water temperature (65 - 80°C).

The setting of the current day and time is essential to ensure the chrono operates correctly.

RECOMMENDATIONS

Before using the chrono function, set the current day and time. Therefore check that the points listed in the "*Set clock*" sub-chapter have been followed, so that the chrono function works. Aside from programming it, activate it as well.
The ignition and switch-off times must be within the arc of one day, from 0 to 24 and not over several days:

Example:

CORRECT	INCORRECT
Switch-on time 07:00 Switch-off time 18:00	Switch-on time 22:00 Switch-off time 05:00

CONTROLS PROCEDURE
- Press key 6.
- Proceed by pressing key 2 until **SET CHRONO** is displayed.
- Confirm using key 6.
- Use keys 4-5 to enable/disable - set/edit the time.
- Press key 2 to go forwards 3 to go back.
- Press key 1 several times to confirm and exit the menu.

SET CHRONO

DISPLAY	TEMPERATURE	MEANING
ENABLE CHRONO	On/off	Enable/disable the whole set chrono
ENABLE PRG1	On/off	Enable/disable PRG1
ENABLE PRG2	On/off	Enable/disable PRG2
ENABLE PRG3	On/off	Enable/disable PRG3
ENABLE PRG4	On/off	Enable/disable PRG4
START PRG1	OFF-00:00-23:50	PRG1 ignition time
STOP PRG1	OFF-00:00-23:50	PRG1 switch-off time
MONDAY...SUNDAY	On/off	Enable/disable the days of PRG1
SET PRG1	65-80°c	PRG1 boiler temperature
START PRG2	OFF-00:00-23:50	PRG2 ignition time
STOP PRG2	OFF-00:00-23:50	PRG2 switch-off time
MONDAY...SUNDAY	On/off	Enable/disable the days of PRG2
SET PRG2	65-80°c	PRG2 boiler temperature
START PRG3	OFF-00:00-23:50	PRG3 ignition time
STOP PRG3	OFF-00:00-23:50	PR3 switch-off time
MONDAY...SUNDAY	On/off	Enable/disable the days of PRG3
SET PRG3	65-80°c	PRG3 boiler temperature
START PRG4	OFF-00:00-23:50	PRG4 ignition time
STOP PRG4	OFF-00:00-23:50	PRG4 switch-off time
MONDAY...SUNDAY	On/off	Enable/disable the days of PRG4
SET PRG4	65-80°c	PRG4 boiler temperature

WHEN THE WEEKLY PROGRAMMER IS ACTIVE, A BOX OF THE RELATIVE ICON WILL APPEAR ON THE CONTROL BOARD.

STATUS

References reserved to the technician

SETTINGS

SET CLOCK
ADJUSTING LANGUAGE

- see chapter: commissioning settings

DISPLAY

The "DISPLAY" menu contains two sub-menus:
- Key lock
- Brightness.

KEY LOCK

The menu allows the user to lock the display keys (like with mobile phones).

CONTROLS PROCEDURE
- Press key 6.
- Proceed by pressing key 2 until **SETTINGS IS DISPLAYED.**
- Confirm using key 6.
- Press key 2 until **DISPLAY** is shown.
- Confirm using key 6.
- **KEY LOCK** will appear - confirm with key 6.
- Use keys 4 -5 to enable **ON**/ disable **OFF**.
- Press key 1 several times to confirm and exit the menu.

USING THE KEY LOCK AFTER ACTIVATION:

TO LOCK THE KEYBOARD, PRESS KEYS 1 AND 5 AT THE SAME TIME UNTIL THE FOLLOWING APPEARS: "KEYS LOCKED"
TO UNLOCK THE KEYBOARD, PRESS KEYS 1 AND 5 AT THE SAME TIME UNTIL THE FOLLOWING APPEARS: "KEYS UNLOCKED"

BRIGHTNESS

This menu allows the user to adjust the brightness of the display. The possible settings range from OFF - 10 to 31.
Activating OFF, the back light of the display will go off after a preset delay.
The back light will go on as soon as a key is pressed or if an alarm should be triggered in the machine.

CONTROLS PROCEDURE
- Press key 6.
- Proceed by pressing key 2 until **SETTINGS IS DISPLAYED.**
- Confirm using key 6.
- Press key 2 until **DISPLAY** is shown and use key 6 to confirm.
- Press key 2 until **BRIGHTNESS** appears and confirm with key 6.
- Use keys 4 - 5 to set the brightness.
- Press key 1 several times to confirm and exit the menu.

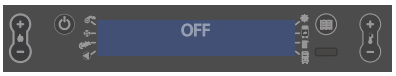

STAND - BY

The Stby function is used if immediate stove switch-off or modulation via
an additional thermostat is desired

CONTROLS PROCEDURE
- Press key 6 and **SET POWER** will appear.
- Press key 2 several times until **SETTINGS** is displayed.
- Press key 6.
- Press key 2 until **STAND-BY** is displayed and use key 6 to confirm.
- Use keys 4 -5 to select enable "ON"/disable "OFF".
- Press key 1 several times to confirm and exit the menu.

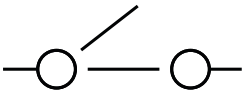

AUX

If using powerline accessories of the manufacturer, the connection must be carried out by the technician enabled directly in the board.
Contact the dealer for further details.

CLEANING AND MAINTENANCE

ALWAYS FOLLOW THE INSTRUCTIONS IN MAXIMUM SAFETY CONDITIONS!

- Make sue the power cable is unplugged since the generator could be programmed to start.
- That the generator is cold in its entirety.
- The ashes are completely cold.
- Ensure an effective exchange of air in the room during the cleaning of the product.
- A poor cleaning is detrimental to the proper functioning and safety!

MAINTENANCE

For correct operation, the generator must undergo routine maintenance by a **qualified technician** at least once a year.
The routine checks and maintenance operations must always be performed by **qualified** trained technicians in accordance with the applicable regulations in force and with the instructions provided in this use and maintenance manual.

EVERY YEAR MAKE THE EXHAUST FUMES, SMOKE DUCTS AND "T"-FITTINGS, INCLUDING CAPS AND INSPECTION DOORS BE CLEANED - IF ANY CURVES AND ANY HORIZONTAL SECTIONS!
THE CLEANING OF THE GENERATOR FREQUENCY IS APPROXIMATE! THEY DEPEND ON THE QUALITY OF THE PELLETS USED AND THE FREQUENCY OF USE.
IT CAN HAPPEN THAT THESE OPERATIONS SHOULD BE PERFORMED MORE FREQUENTLY.

CLEANING AND MAINTENANCE BY THE USER

Routine cleaning operations, as specified in this use and maintenance manual, must be performed with the utmost care according to the instructions, procedures and frequency intervals described in this use and maintenance manual

CLEANING THE SURFACES AND COVERING
Never use abrasive or chemically aggressive detergents for cleaning!
The surface cleaning must take place when both the generator and the coating are completely cold. For the maintenance of surfaces and metal parts, simply use a damp cloth with water or mild soap and water.
Failure to observe the instructions may damage the surface of the generator and invalidate the warranty.

CLEANING THE CERAMIC GLASS
Never use abrasive or chemically aggressive detergents for cleaning!
The cleaning of the ceramic glass is allowed only when the latter is completely cold.
To clean the ceramic glazing, simply use a dry brush and some damp newspaper dabbed in the ash. If the glazing is very dirty, only use a specific ceramic glazing detergent. Spray a modest amount onto a cloth and wipe the ceramic glazing.
Do not spray cleaner or any other liquid directly on the glass or on the gaskets.
Failure to observe the instructions may damage the surface of the ceramic glass and invalidate the warranty.

CLEANING THE TANK PELLETS
When the tank empties completely, unplug the power cord from the generator and remove residues (dust, chips, etc..) from the tank empty, before filling it.

DAILY- BRAZIER:

Through a mechanical system, the burn pot is cleaned at set intervals automatically by the boiler. In the picture below one can see the burn pot with the opening underneath it.
It is in any case recommended to remove any ash residue using a vacuum cleaner, at least once every 2 days.

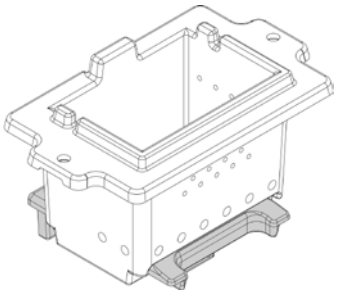

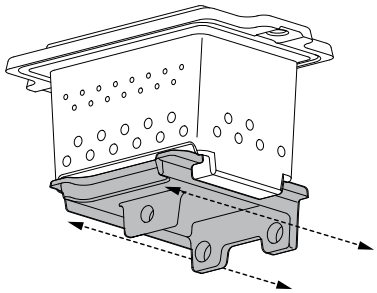

DAILY - SCRAPERS:

The heat exchangers must only be cleaned when the generator is cold! Cleaning the heat exchangers allows to ensure constant heat output over time. This type of maintenance must be performed at least once a day. To do this, just use the relevant scrapers positioned in the upper part of the generator, making the upward movements and vice versa several times.

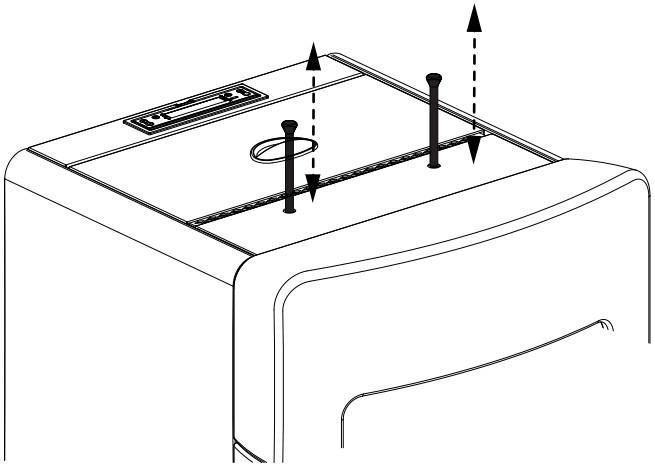

WEEKLY - COMBUSTION CHAMBER AND THE ASH TRAY:

It is recommended to remove the ash in the combustion chamber at least once a week using a suitable vacuum cleaner.

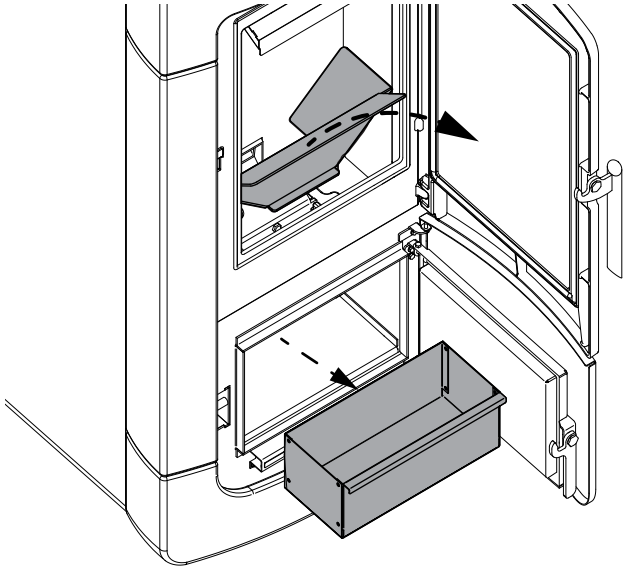

EVERY MONTH

Cleaning the deflector:

The fumes deflector located in the upper part of the combustion chamber must be removed on a monthly basis (see figure). To remove it simply pull out the central fumes deflector as if it were a drawer.

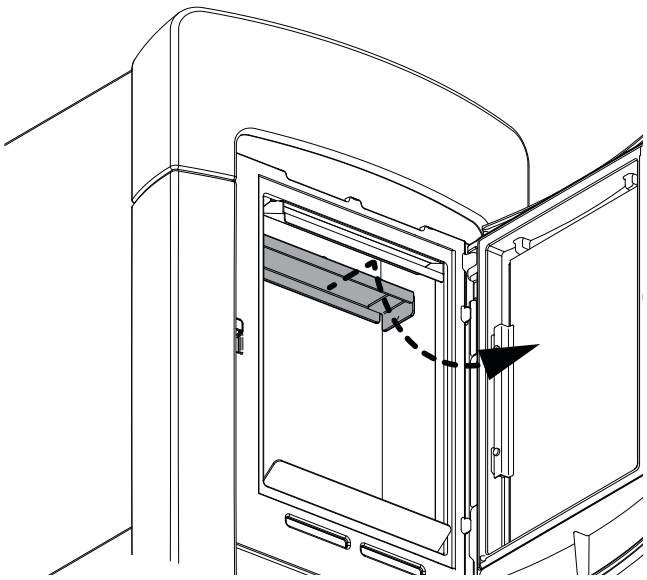

A CLEAN BRAZIER ENSURES SUCCESSFUL OPERATION!

KEEPING THE BRAZIER AND ITS HOLES ALWAYS THOROUGHLY CLEAN FROM ANY RESIDUE FROM THE COMBUSTION, GUARANTEES EXCELLENT COMBUSTION OF THE GENERATOR OVER TIME, TO AVOID ANY MALFUNCTIONS THAT MAY REQUIRE THE INTERVENTION OF THE TECHNICIAN.

IT IS POSSIBLE TO USE THE FUNCTION IN THE USER MENU "ADJUSTMENT SET - PELLET LOAD TO ADJUST COMBUSTION BASED ON THE DESCRIBED REQUIREMENTS.

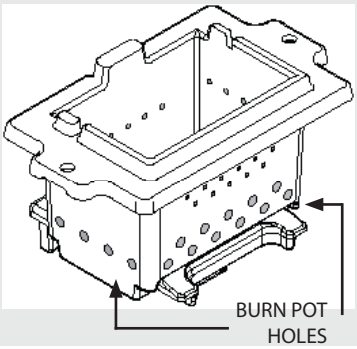

IF THE POWER SUPPLY CABLE IS DAMAGED, IT MUST BE REPLACED BY TECHNICAL SERVICE STAFF OR IN ANY CASE BY A SIMILARLY QUALIFIED TECHNICIAN, SO AS TO AVOID ALL RISKS.

ROUTINE MAINTENANCE PERFORMED BY QUALIFIED TECHNICIANS

Routine maintenance must be performed at least once a year.

Since the generator uses pellets as its solid fuel, it requires an annual routine maintenance operation which must be performed by a **qualified technician, using original spare parts only.**

Failure to comply with the above can compromise the safety of the appliance and void the guarantee conditions.
Complying with the cleaning intervals dedicated to the user described in the use and maintenance manual will guarantee the correct combustion by the generator over time, avoiding any malfunctioning and/or failures which could require further intervention by the technician. Routine maintenance requests are not covered by the product guarantee.

DOOR GASKETS, ASH DRAWER AND BURN POT

Gaskets guarantee the hermetic seal of the stove and its ensuing correct operation.
They must therefore be checked regularly: should they be worn or damaged, replace them immediately.
This must be performed by a qualified technician.

CONNECTION TO THE CHIMNEY

Suction and clean the flue duct leading to the chimney once a year or whenever necessary. If the installation entails horizontal flue duct sections, suction all residue before it obstructs the passage of fumes.

DECOMMISSIONING (END OF SEASON)

At the end of every season, before you turn the stove off, it is advisable to empty the pellet tank completely, suctioning any pellet residue and dust from the inside.
WE ADVISE YOU NOT TO DISCONNECT THE GENERATOR FROM THE ELECTRICAL POWER SUPPLY, SO AS TO ALLOW THE PUMP TO PERFORM THE NORMAL ANTI-LOCKING CYCLES.
Routine maintenance must be performed at least once a year.

ROUTINE MAINTENANCE

THE PICTURES ARE PURELY INDICATIVE.

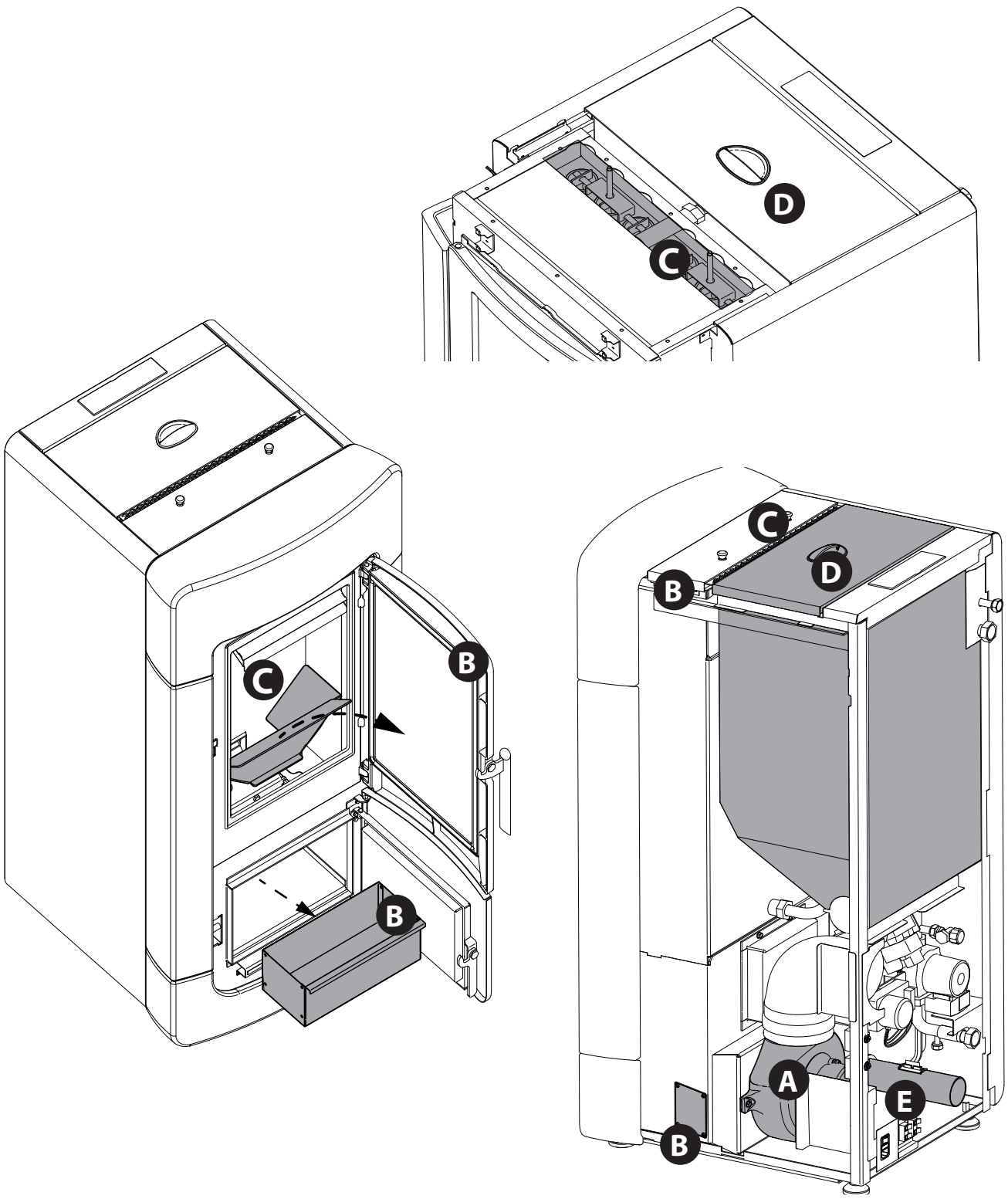

A	Fumes motor (disassembly and cleaning and flue duct and "T"), new silicone in the dedicated points
B	Inspection of gaskets, ash drawer and door (replace and apply silicone where envisaged)
C	Combustion chamber and heat exchanger (full cleaning) including ignition-plug pipe cleaning
D	Tank (complete emptying and cleaning)
E	Air intake pipe check and cleaning of the flow sensor where necessary

DISPLAYS	
DISPLAY	**REASON**
OFF	Generator off
START	The start-up phase is in progress
PELLET FEEDING	Continuous pellet feeding is in progress during the ignition phase
IGNITION	The ignition phase is in progress
START-UP	The start-up phase is in progress
WORK	The normal work phase is in progress
MODULATION	The generator is working at minimum
BURN POT CLEANING	Automatic burn pot cleaning is in progress
***BURN POT CLEANING DEPRESSION**	Automatic burn pot cleaning is in progress - due to insufficient depression.
FINAL CLEANING	The final cleaning is in progress
STAND-BY	Generator off waiting for re-ignition due to an external thermostat
STAND-BY COOLING	A new ignition is attempted when the generator has just been switched off. When the generator switches off, one must wait for the complete shutdown of the fumes motor, then clean the burn pot. The generator can only be re-ignited when these operations have been performed.
HOFF	Generator off due to water temperature over set.
***T-AMB**	Displays room temperature (in the models designed for it).
***T - OFF**	Generator off waiting for re-ignition as all the requests have been satisfied
STAND-BY BLACK OUT	The generator is cooling after a power cut. Once cooling is completed it will re-start automatically
ANTI-FREEZE	The anti-freeze function is in progress as the H2O t° is below the factory set threshold the pump is active until the water reaches the pre-set factory parameter +2°C
ANTILOCK	The pump antilock function is in progress (only if the generator has been in an OFF state for at least 96 hours); the pump is activated for the time pre-set by the manufacturer, in order to prevent it from blocking
AUTO BLOW	The automatic blow is active
***EXCHANGER BLOCK**	Automatic exchanger cleaning is blocked

ALARMS		
DISPLAY	**EXPLANATION**	**SOLUTION**
⚠	Indicates the presence of an alarm.	On: indicates the presence of an alarm Flashing: indicates the deactivation of the depression sensor. The alarm can be reset by pressing key 1/ ⏻ for 3 seconds only if the fumes motor has stopped and if 15 minutes have elapsed from when the alarm was displayed.
ASPIRATION FAULT	Fumes motor fault	Contact after-sales centre

* on applicable models.

FUMES PROBE	Fumes probe failure.	Contact after-sales centre
HOT FUMES	High flue gas temperature	Check pellet feed (see "Pellet feed adjustment"). If the problem cannot be solved, contact an authorised technician.
ALL CLEAN CHECH UP	The door is not closed correctly. The ash drawer is not closed correctly. The combustion chamber is dirty. The flue exhaust pipe is blocked.	Check hermetic door closure. Check hermetic closure of the ash drawer. Check cleanliness of the fumes pipe, of the sensor in the primary air channel and the combustion chamber.
NO IGNITION	The pellet feed-box is empty. Pellet feed calibration inadequate. Thermostat bulbs tripped	Check for the presence of pellets in the feed-box. Adjust pellet flow (see "Pellet feed adjustment"). Check the procedures described in the "Ignition" chapter. Check the bulb thermostats (see Rearms chapter)
NO IGNITION BLACK OUT	No current during the ignition phase.	Set the stove on OFF using key 1 and repeat the procedure described in the "Ignition" chapter.
NO PELLETS	The pellet feed-box is empty. No pellet feed. The motor reducer does not feed pellets.	Check for the presence of pellets in the feed-box. Adjust the pellet flow (see "Pellet feed adjustment").
DEPRESSION ALARM	The door is not closed correctly. The ash drawer is not closed correctly. The combustion chamber is dirty. The flue exhaust pipe is blocked/dirty.	Check hermetic door closure. Check hermetic closure of the ash drawer. Check cleanliness of the fumes pipe and the combustion chamber.
DEBIMETER FAULT	Flow sensor faulty. Sensor disconnected	Contact after-sales centre
H20 OVERTEMP	Air in the system Unsuitable circulation	Possible air in the system, vent the system. Lack of adequate circulation. Lack of or inadequate safety zone. The water in the stove has exceeded 95°C. Possible circulator anomaly. If the problem persists, the reset operations must be carried out by an authorised technician.
*** TRAPDOOR FAULTY**	The automatic burn pot cleaning is blocked. Burn pot dirty or clogged The door is not closed correctly.	Check closure of the door. Check that the burn pot is clear and clean. The automatic burn pot cleaning is blocked. If the problem persists contact the service centre
ALL-MIN H2O PRES-SURE	The system pressure read by the pressure switch is too low.	Possible air in the system, vent the system. Possible lack of water or leaks due to anomalies in some system component. If the problem persists contact the service centre
H2O PROBE	H2O probe failure	Contact after-sales centre
ALL-MAX H2O PRES-SURE	The pressure of the water has exceeded the max threshold	Possible air in the system, vent the system. Check that the expansion vessels are not damaged or under-dimensioned Check that the cold system is loaded at the correct pressure If the problem persists contact the service centre
*** PRESSURE SENSOR FAULTY**	Defective, disconnected or faulty differential pressure sensor.	Contact after-sales centre
*** AUGER CONTROL**	Anomalous pellet loading.	Contact after-sales centre
*** AUGER BLOCK**	Anomalous functioning of the motor.	Contact after-sales centre
*** BOILER PROBE**	Boiler probe failure.	Contact after-sales centre
*** PUFFER PROBE**	Boiler probe failure.	Contact after-sales centre
*** TANK EMPTY**	The pellet feed-box is empty. The door is not closed correctly. The ash drawer is not closed correctly. The combustion chamber is dirty. The flue exhaust pipe is blocked.	Check for the presence of pellets in the feed-box. Check hermetic door closure. Check hermetic closure of the ash drawer. Check cleanliness of the fumes pipe, of the sensor in the primary air channel and the combustion chamber. Contact after-sales centre

* on applicable models

GUARANTEE TERMS

1. Extraflame S.p.A. products are guaranteed, within the European community, for 24 months from the date of purchase.
Purchase has to be proved by means of a valid fiscal document issued by the seller (receipt, invoice or shipment document) identifying the purchased product and its purchase and/or delivery date.

WARNING: This conventional guarantee does not replace the guarantee regulated by the European legislation on consumer rights.

The conventional guarantee is only applicable to the Italian region and to those areas, within the European Community, where the Authorised Technical Assistance Centres are active (see the www.lanordica-extraflame.com website)
It is also limited to the state of residence of the consumer, which must coincide with the premises and/or registered office of the seller of the Extraflame S.p.A. product
These regulations do not apply if the product is purchased within commercial, entrepreneurial, or professional circumstances. In these cases the product guarantee will be limited to a period of 12 months from the date of purchase.

ITALIAN GUARANTEE

What must be done if there is a product malfunction:
Consult the instructions manual to make sure the malfunction cannot be solved by using the product correctly. Make sure the malfunction is included in those covered by the guarantee; otherwise the cost of the intervention will be borne entirely by the consumer. When requesting the intervention of the Assistance service at the Authorised Assistance Centre, always specify: - type of malfunction - model of the appliance - complete address - phone number

EUROPEAN GUARANTEE

What must be done if there is a product malfunction:
Consult the instructions manual to make sure the malfunction cannot be solved by using the product correctly. Make sure the malfunction is included in those covered by the guarantee; otherwise the cost of the intervention will be borne entirely by the consumer. Request the intervention of the Assistance service or the address of the Authorised Technical Assistance Centre to the seller; always specify: type of malfunction, model of the appliance, complete address and phone number

If the malfunction arises in the first 6 months of the product's life, the consumer has the right to have the product repaired with no expense. From the seventh to the twenty-fourth month, if a malfunction arises, the consumer will bear the cost of the call, while the seller will pay for the manpower and for any spare parts used.

2. If the malfunction is linked to external events and/or conditions such as, including but not limited to, insufficient capacity of the systems; wrong installation and/or maintenance by the personnel which hasn't got the skills prescribed by the laws of the country of residence of the consumer; negligence; inability to use the product and wrong maintenance by the consumer, with respect to what is reported and recommended by the instructions manual of the product, which is part of the sales contract, this guarantee will be void.
Damage to the product that cannot be related to manufacturing defects are also not included in this guarantee. Similarly are excluded defects related to incorrect operation of the flue, according to the legislation in force in the country at the moment of purchase. Other exclusions include all product defects due to carelessness, accidental breakdown, tampering and/or damage during transport (scratches, dents, etc.), interventions carried out by unauthorised personnel and further damage caused by incorrect interventions by the consumer trying to arrange the initial malfunction.
The following consumables are excluded by the guarantee: gaskets, ceramic or tempered glasses, cast iron grilles or coatings, refractory materials (e.g. Nordiker or others), painted, chrome-plated or golden parts, majolica ware, handles, the brazier and its related components. For Idro products the heat exchanger is not covered by the guarantee if a suitable condensation-proof circuit is not set up to ensure a return temperature of the device of at least 55°C. The guarantee excludes all the external components on which the consumer can directly operate during use and/or maintenance or that can be subject to wear and/or rust and stains on steel due to aggressive detergents.
If malfunctions are signalled which are not later confirmed during check by an authorised technician, the cost of the intervention will be borne entirely by the consumer.

3. If it is not possible to restore product conformity by repairing it, the product/component will be replaced, the guarantee expiration date and conditions will remain the same established when the product/component to be replaced has been purchased.

4. Extraflame S.p.A. cannot be held liable for injury or damage which may - either directly or indirectly - be caused to persons, animals and property ensuing from failure to observe all the instructions provided in the relevant instruction manual and the warnings regarding installation, use and maintenance of the product, that can also be downloaded on the website.

5. Interventions for adjusting and/or regulating the product for the type of fuel or other reasons are excluded by the guarantee.

6. If the product is repaired in one of the Authorised Technical Assistance Centres indicated by Extraflame S.p.A. and if the product is replaced, transport will be free of charge. If the technician can repair the product at the user's place of residence and they refuse, transport to the workshop and redelivery will be paid by the consumer.

7. After the 24 months of the guarantee have elapsed any repair intervention cost will be completely borne by the consumer.

8. In the case of disputes the only competent court is that of the Extraflame S.p.A. registered office - (Vicenza-Italy)

ADDITIONAL WARNINGS

- Only use the fuel recommended by the manufacturer. The product must not be used as an incinerator.
- Do not use the product as a ladder or supporting structure.
- Do not place laundry on the product to dry it. Any clothes-horse or similar objects must be kept at due distance from the product. Danger of fire or damage to the coating.
- The user is fully liable for any incorrect use of the product. The manufacturer bears no civil or criminal liability for incorrect use.
- Unauthorised tampering of any nature or replacement of spare parts of the product with non-original parts may endanger the operator and the manufacturer bears no civil or criminal liability for this.
- Large parts of the surface of the product can get very hot (door, handle, glass, smoke outlet pipes, etc.). Please therefore avoid coming into contact with these parts without wearing suitable protective clothing or using appropriate measures, such as heat protective gloves.
- DO NOT use the product with the door open or if the glass is broken.
- The product must be electrically connected to a system equipped with an operational earthing system.
- Turn off the product in the event of a failure or malfunctioning.
- Unburned pellets that build up in the burner following each failed start-up must be removed before attempting to start up the product again. Make sure that the burner is clean and correctly positioned before starting it up again.
- Do not wash the product with water. Water may penetrate into the unit and cause faults in the electrical insulation. This can cause electric shocks.
- Installations not complying with the regulations in force, as well as incorrect use and failure to comply with the maintenance scheduled by the manufacturer, will invalidate the guarantee.

DISPOSAL

INFORMATION FOR MANAGEMENT OF ELECTRIC AND ELECTRONIC APPLIANCE WASTE CONTAINING BATTERIES OR ACCUMULATORS

This symbol, which is used on the product, batteries, accumulators or on the packaging or documents, means that at the end of its useful life, this product, the batteries and the accumulators included must not be collected, recycled or disposed of together with domestic waste. Improper management of electric or electronic waste or batteries or accumulators can lead to the leakage of hazardous substances contained in the product. For the purpose of preventing damage to health or the environment, users are kindly asked to separate this equipment and/or batteries or accumulators included from other types of waste and to arrange for disposal by the municipal waste service It is possible to ask your local dealer to collect the waste electric or electronic appliance under the conditions and following the methods provided by national laws transposing the Directive 2012/19/EU.

Separate waste collection and recycling of unused electric and electronic equipment, batteries and accumulators helps to save natural resources and to guarantee that this waste is processed in a manner that is safe for health and the environment.
For more information about how to collect electric and electronic equipment and appliances, batteries and accumulators, please contact your local Council or Public Authority competent to issue the relevant permits.

Extraflame®

Riscaldamento a Pellet

Extraflame S.p.A. Via Dell'Artigianato, 12 36030 - MONTECCHIO PRECALCINO (VI) - ITALY
☏ +39.0445.865911 - 🖷 +39.0445.865912 - ✉ info@extraflame.it - 💻 www.lanordica-extraflame.com

MADE IN ITALY
design & production

TO FIND THE SERVICE CENTRE NEAREST TO YOU CONTACT YOUR DEALER OR CONSULT THE SITE WWW.LANORDICA-EXTRAFLAME.COM

The manufacturer reserves the right to vary the characteristics and the data reported in this pamphlet at any moment and without notice, in order to improve its products.
This manual, therefore, cannot be regarded as a contract towards other parties.