Extraflame®

Riscaldamento a Pellet

UK

THERMO PRODUCTS USER MANUAL

FIANDRA IDRO EVO

MADE IN ITALY
design & production

APPLY TECHNICAL
DATA LABEL

⚠ ATTENTION

SURFACES CAN BECOME VERY HOT!
ALWAYS USE PROTECTIVE GLOVES!

During combustion, thermal energy is released that significantly increases the heat of surfaces, doors, handles, controls, glass, exhaust pipes, and even the front of the appliance. Avoid contact with those elements if not wearing protective clothing (protective gloves included). Make sure children are aware of the danger and keep them away from the stove during operation.

ENGLISH **5**

WARNINGS **5**
SAFETY **5**
ROUTINE MAINTENANCE **7**
INSTALLATION **8**
PREPARATIONS FOR MAINTENANCE 8
HERMETICALLY SEALED INSTALLATION **10**
COMBUSTION AIR 10
FUMES EXHAUST SYSTEM 10
HYDRAULIC SYSTEM **11**
INSTALLATION AND SAFETY DEVICES 11
ANTI-CONDENSATION DEVICE (MANDATORY) **12**
FIANDRA IDRO EVO DETAILS **13**
ON/OFF 13
FEATURES **14**
CHECKS AND MEASURES FOR COMMISSIONING **14**
THE PELLET LOAD MOTOR DOES NOT FUNCTION: 14
BULB THERMOSTATS - REARM 14
STOVE POSITIONING **15**
NOTE FOR CORRECT OPERATION **15**
REARM 15
FUSE 15
PELLETS AND FEEDING **16**
PELLET TANK **16**
RADIO/EMERGENCY CARD **17**
RADIO CONTROL DEVICE **18**
CONFIGURATION 18
RADIO CONTROL DEVICE ROOM PROBE CALIBRATION 18
BATTERY TYPE AND REPLACEMENT 18
RADIO CONTROL DEVICE FEATURES **19**
DISPLAY **20**
GENERAL MENU **21**
GENERAL WARNINGS 21
FIRST IGNITION SETTINGS **22**
DATE-TIME 22
LANGUAGE 22
DEGREES 22
OPERATION AND LOGIC **23**
ADDITIONAL THERMOSTAT **24**
ADDITIONAL THERMOSTAT FUNCTIONING WITH STAND BY **ACTIVE** **24**
ADDITIONAL THERMOSTAT OPERATION WITH STAND BY DEACTIVATED 24
ADDITIONAL THERMOSTAT INSTALLATION 24
VENTILATION **25**
EASY SETUP **25**
CHRONO **26**
PRG 1-4 26
SETTINGS **28**
DISPLAY 28
STAND BY 28
FIRST LOAD 28
OUTLET AIR 28
CLEANING 28
RESET 29
EASY CONTROL 29
DEPRESSURE NOTICE 29
ADDITIONAL FUNCTIONS **29**
OPTIONAL ADDITIONAL DATA SHEET 29
CLEANING AND MAINTENANCE **30**
MAINTENANCE **30**
PERIODIC CLEANING UNDER USER'S RESPONSIBILITY 30
ROUTINE MAINTENANCE PERFORMED BY QUALIFIED TECHNICIANS **32**
SHUT-DOWN (END OF SEASON) 32
DISPLAYS **34**
ALARMS **34**
DISPOSAL **36**

ATTENZIONE TASSATIVO
PRIMA DI MOVIMENTARE LA STUFA TOGLIERE LE MAIOLICHE INDICATE PER EVITARE DANNI.

ATTENTION - COMPULSORY
BEFORE MOVING THE STOVE, KINDLY TAKE THE CERAMICS OFF IN ORDER TO AVOID ANY DAMAGES

ATTENTION - OBLIGATOIRE
AVANT DE BOUGER LE POÊLE , FAIRE ATTENTION À LEVER LES CÉRAMIQUES INDIQUÉES POUR ÉVITER DES DÉGÂTS

VORSICHT - OBLIGATORISCH
BEVOR SIE DEN OFEN BEWEGEN , BITTE UNBEDINGT DIE BEZEICHNETE KERAMIK KACHELN ENTFERNEN UM SCHÄDEN ZU VERMEIDEN

ATENCIÓN - PERENTORIO
ANTES DE MOVER LA ESTUFA SACAR LAS MAYÓLICAS INDICADAS PARA EVITAR DAÑOS.

UWAGA - OBOWIĄZEK
PRZED PRZYSTĄPIENIEM DO PRZEMIESZCZANIA PIECA ZDJĄĆ WSKAZANE MAJOLIKI ABY UNIKNĄĆ USZKODZENIA.

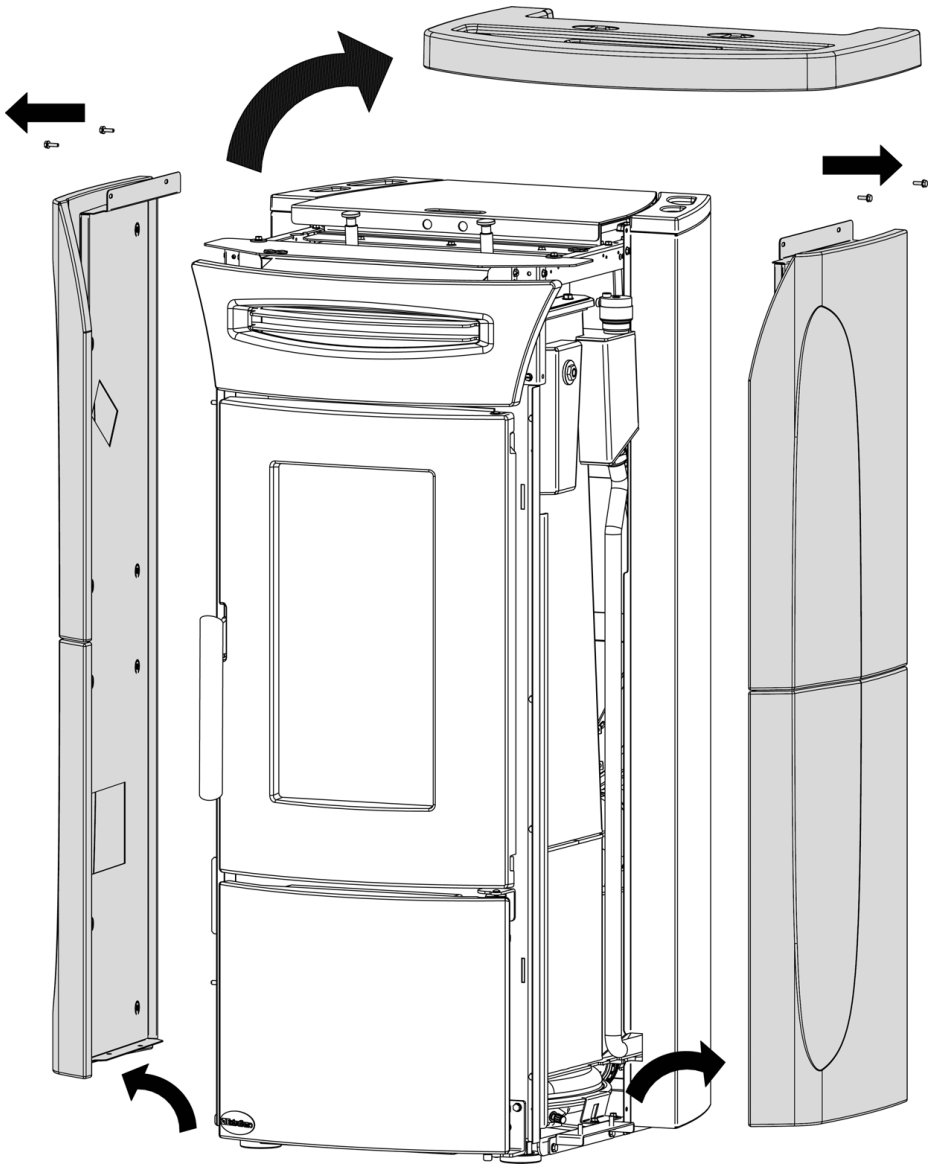

We thank you for having chosen our company; our product is a great heating solution developed from the most advanced technology with top quality machining and modern design, aimed at making you enjoy the fantastic sensation that the heat of a flame gives, in complete safety.

WARNINGS

This instructions manual is an integral part of the product: make sure that it always accompanies the appliance, even if transferred to another owner or user, or if transferred to another place. If it is damaged or lost, request another copy from the area technician. This product is intended for the use for which it has been expressly designed. The manufacturer is exempt from any liability, contractual and extracontractual, for injury/damage caused to persons/animals and objects, due to installation, adjustment and maintenance errors and improper use.
Installation must be performed by qualified staff, which assumes complete responsibility for the definitive installation and consequent good functioning of the product installed. One must also bear in mind all laws and national, regional, provincial and town council Standards present in the country in which the appliance has been installed, as well as the instructions contained in this manual.
The use of the appliance must comply with all local, regional, national and European regulations.
The Manufacturer cannot be held responsible for the failure to comply with such precautions.
After removing the packaging, ensure that the content is intact and complete. Otherwise, contact the dealer where the appliance was purchased.
All electric components that make up the product must be replaced with original spare parts exclusively by an authorised after-sales centre, thus guaranteeing correct functioning.

SAFETY

- **THE APPLIANCE MAY BE USED BY CHILDREN 8 YEARS OF AGE OR OLDER AND INDIVIDUALS WITH REDUCED PHYSICAL, SENSORY, OR MENTAL CAPACITIES OR WITHOUT EXPERIENCE OR THE NECESSARY KNOWLEDGE, PROVIDED THAT THEY ARE SUPERVISED OR HAVE**

RECEIVED INSTRUCTIONS ON SAFE USE OF THE APPLIANCE AND THAT THEY UNDERSTAND THE INHERENT DANGERS.

- THE GENERATOR MUST NOT BE USED BY PERSONS (INCLUDING CHILDREN) WITH REDUCED PHYSICAL, SENSORY AND MENTAL CAPACITIES OR WHO ARE UNSKILLED PERSONS, UNLESS THEY ARE SUPERVISED AND TRAINED REGARDING USE OF THE APPLIANCE BY A PERSON RESPONSIBLE FOR THEIR SAFETY.
- THE CLEANING AND MAINTENANCE REQUIRED BY THE USER MUST NOT BE PERFORMED BY CHILDREN WITHOUT SUPERVISION.
- CHILDREN MUST BE CHECKED TO ENSURE THAT THEY DO NOT PLAY WITH THE APPLIANCE.
- DO NOT TOUCH THE GENERATOR WHEN YOU ARE BAREFOOT OR WHEN PARTS OF THE BODY ARE WET OR DAMP.
- IT IS FORBIDDEN TO MODIFY THE APPLIANCE IN ANY WAY.
- DO NOT PULL, REMOVE, TWIST THE ELECTRICAL CABLES COMING OUT OF THE PRODUCT EVEN IF IT IS DISCONNECTED FROM THE MAINS.
- IT IS ADVISED TO POSITION THE POWER SUPPLY CABLE SO THAT IT DOES NOT COME INTO CONTACT WITH HOT PARTS OF THE APPLIANCE.
- THE POWER SUPPLY PLUG MUST BE ACCESSIBLE AFTER INSTALLATION.
- DO NOT CLOSE OR REDUCE THE DIMENSIONS OF THE AIRING VENTS IN THE PLACE OF INSTALLATION. THE AIRING VENTS ARE ESSENTIAL FOR CORRECT COMBUSTION.
- DO NOT LEAVE THE PACKAGING ELEMENTS WITHIN REACH OF CHILDREN OR UNASSISTED DISABLED PERSONS.
- THE HEARTH DOOR MUST ALWAYS BE CLOSED DURING NORMAL FUNCTIONING OF THE PRODUCT.
- WHEN THE APPLIANCE IS FUNCTIONING AND HOT TO THE TOUCH, ESPECIALLY ALL EXTERNAL SURFACES, ATTENTION MUST BE PAID
- CHECK FOR THE PRESENCE OF ANY OBSTRUCTIONS BEFORE SWITCHING THE APPLIANCE ON FOLLOWING A PROLONGED PERIOD OF INACTIVITY.
- THE GENERATOR HAS BEEN DESIGNED TO ADJUST ITSELF AUTOMATICALLY IN PARTICULAR OPERATING CONDITIONS
- THE GENERATOR HAS BEEN DESIGNED TO FUNCTION IN ANY CLIMATIC CONDITION. IN PARTICULARLY ADVERSE CONDITIONS

(STRONG WIND, FREEZING) SAFETY SYSTEMS MAY INTERVENE THAT SWITCH THE GENERATOR OFF. IF THIS OCCURS, CONTACT THE TECHNICAL AFTER-SALES SERVICE AND ALWAYS DISABLE THE SAFETY SYSTEMS.

- **IN THE EVENT THE FLUE CATCHES FIRE, USE SUITABLE SYSTEMS FOR SUFFOCATING THE FLAMES OR REQUEST HELP FROM THE FIRE BRIGADE.**
- **THIS APPLIANCE MUST NOT BE USED TO BURN WASTE**
- **DO NOT USE ANY FLAMMABLE LIQUIDS FOR IGNITION**
- **DURING THE FILLING PHASE DO NOT PUT THE BAG OF PELLETS TO INTO CONTACT WITH THE PRODUCT**
- **THE MAJOLICAS ARE TOP QUALITY ARTISAN PRODUCTS AND AS SUCH CAN HAVE MICRO-DOTS, CRACKLES AND CHROMATIC IMPERFECTIONS. THESE FEATURES HIGHLIGHT THEIR VALUABLE NATURE. DUE TO THEIR DIFFERENT DILATION COEFFICIENT, THEY PRODUCE CRACKLING, WHICH DEMONSTRATE THEIR EFFECTIVE AUTHENTICITY. TO CLEAN THE MAJOLICAS, IT IS RECOMMENDED TO USE A SOFT, DRY CLOTH. IF A DETERGENT OR LIQUID IS USED, THE LATTER COULD PENETRATE INSIDE THE CRACKLES, HIGHLIGHTING THEM.**
- **SINCE THE PRODUCT CAN TURN ON AUTOMATICALLY THANKS TO THE TIMER, OR REMOTELY USING THE DEDICATED APPLICATIONS, IT IS STRICTLY FORBIDDEN TO LEAVE ANY COMBUSTIBLE OBJECT WITHIN THE SAFETY DISTANCES INDICATED ON THE TECHNICAL DATA PLATE.**
- **INTERNAL COMBUSTION CHAMBER PARTS CAN BE SUBJECT TO EXTETICAL WARN, IT DOESN'T AFFECT THE FUNCTIONALITY**

ROUTINE MAINTENANCE

Based on Decree 22 January 2008 n°37 art.2, routine maintenance means interventions aimed at reducing degradation due to normal use, as well as dealing with accidental events entailing the need of first interventions, which however do not modify the structure of the system upon which one is intervening or its intended use according to the requirements laid down by the technical standards in force and by the manufacturer's use and maintenance manual.

INSTALLATION

GENERAL

The flue gas exhaust and hydraulic connections must be carried out by qualified personnel who must issue installation conformity documentation compliant with national standards.
The installer must provide the owner or person acting for him, according to the legislation in force, with the declaration of conformity, supplied with:

1) the use and maintenance manual of the appliance and of the system components (such as for example, the smoke ducts, chimney, etc.);
2) photocopy or photograph of the chimney plaque;
3) system booklet (where applicable).

The installer must ask to be issued with a receipt stating that the documentation has been provided, and must keep it with a copy of the technical documentation relating to the installation.
For installation in a condominium, prior approval from the condominium's administrator must be requested.
Where required, check the exhaust gas emissions after installation. Should a sampling point be installed, it must be airtight.

COMPATIBILITY

Do not install in rooms with a fire hazard. It is also forbidden to install it in living areas with the following characteristics:

1. where there are liquid fuel appliances with continuous or discontinuous operation that draw the combustion air into the room in which they are installed.
2. where there are type B gas appliances intended for heating, with or without domestic hot water production and in adjacent and communicating rooms.
3. where the depression measured in situ between the external and internal environment is greater than 4 Pa.

N.B.: Watertight appliances can also be installed in the cases indicated in points 1, 2 and 3 of this paragraph.

INSTALLATIONS IN BATHROOMS, BEDROOMS AND STUDIO FLATS

Installation in bathrooms, bedrooms and studio flats is only allowed for sealed or closed hearth appliances with ducted combustion air taken from the outside.

POSITIONING AND SAFETY DISTANCES

The support surfaces and/or points must have a suitable capacity to bear the overall weight of the appliance, accessories and coverings. If the floor is made of a combustible material, we recommend using a non-combustible material to protect the front part from any burnt material which might fall during routine cleaning operations. The generator must be level to function properly. The side walls, the rear walls and the floor support surface should be made of non-combustible material.

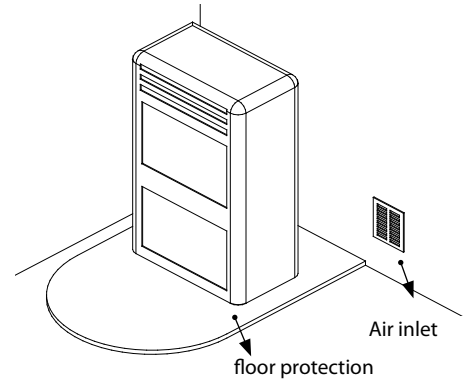

One must also bear in mind all laws and national, regional, provincial and town council regulations in force in the country in which the appliance has been installed, as well as the instructions contained in this manual.

MINIMUM DISTANCES (PELLET STOVES)

Installation next to flammable or heat-sensitive materials is permitted **only if the special safety distances specified on the label at the beginning of the manual (pag.2) are observed**. If the materials are not flammable, you must keep a side and rear distance of at least 100 mm (without the inserts). For products equipped with rear spacers, wall-mounting installation is permitted exclusively for the rear side.

PREPARATIONS FOR MAINTENANCE

To carry out extraordinary maintenance operations on the product, it may be necessary to move it away from the adjacent walls. This must be done by a technician authorised to disconnect the combustion product evacuation ducts and then reconnect them. For heaters connected to the hydraulic system, the connection between the system itself and the product must be made in such a way that, when an authorised technician is about to carry out extraordinary maintenance operations, it is possible to move the heater at least 1 metre away from the adjacent walls.

INSTALLING INSERTS

When installing inserts, access must be prevented to the internal parts of the appliance and it must not be possible to access live parts during extraction operations.
Any wiring, for example the power cable or room probe, must be positioned so as not to be damaged during movement of the insert and must not come into contact with hot parts. If a cavity made of combustible material is installed, we recommend taking all the safety precautions indicated by the installation standards.

VENTILATION AND AERATION OF INSTALLATION ROOMS

In case of non-airtight heater and/or installation, the ventilation must respect the minimum area indicated below (considering the highest value among those provided):

Appliance categories	Reference standard	Percentage of the net opening section with respect to the appliance fumes outlet section	Minimum net opening value of the ventilation duct
Pellet stoves	UNI EN 14785	-	80 cm²
Boilers	UNI EN 303-5	50%	100 cm²

Under any condition, including in the presence of extractor hoods and/or of controlled forced ventilation systems, the pressure difference between the generator installation rooms and the outside must always be equal to or less than 4 Pa.

In the presence of type B gas appliances with intermittent operation not intended for heating, they must have their own aeration and/or ventilation opening.

The air inlets must meet the following requirements:
- they must be protected with grids, metal mesh, etc., but without reducing the net useful section;
- they must be made so as to make the maintenance operations possible;
- positioned so that they cannot be obstructed;

The clean and non-contaminated air flow can also be obtained from a room adjacent to that of installation (indirect aeration and ventilation), as long as the flow takes place freely through permanent openings communicating with the outside.
The adjacent room cannot be used as a garage, or to store combustible material or for any other activity with a fire hazard, bathroom, bedroom or common room of the building.

FLUE GAS EXHAUST
The heat generator works in depression and is equipped with an outlet fan for flue gas extraction. There must be a single exhaust system for the generator. Using a flue that is shared with other devices is not allowed.
The components of the flue gas exhaust system must be chosen in relation to the type of appliance to be installed in compliance with:
- UNI/ TS 11278 in the event of metal chimneys, with particular attention to that stated in the specification;
- UNI EN 13063-1 and UNI EN 13063-2, UNI EN 1457, UNI EN 1806 in the event of non-metallic chimneys.
- The length of the horizontal section must be minimal and, in any case, no longer than 3 metres, with a minimum upward slope of 3%
- There must not be more than 4 direction changes including the one due to the use of the "T" element.
- A "T" fitting with a condensation collection cap must be provided at the base of the vertical section.
- If the exhaust is not inserted in an existing flue, a vertical section with a windproof end piece is required (UNI 10683).
- The vertical duct can be inside or outside the building. If the smoke duct is inserted in an existing flue, it must be certified for solid fuel.
- If the smoke duct is outside the building, it must always be insulated.
- The smoke ducts must have at least one airtight inlet for flue gas sampling.
- All the sections of the flue gas duct must be accessible to inspection.
- Inspection openings must be provided for cleaning.
- If the generator has a fume temperature lower than 160°C+ ambient temperature caused by the high yield (contact technicians) it MUST be resistant to humidity.
- A flue system that does not respect the previous points or, in general, that does not comply with the regulations, may cause condensation phenomena inside it.

CHIMNEY CAP
The chimney caps must meet the following requirements:
- they must have a useful outlet section no less than double that of the chimney/ducted system on which it is installed;
- they must be adapted in order to prevent the penetration of rain and snow in the chimney/ducted system;
- they must be built so that, in the event of winds coming from all directions and from any angle, the expulsion of combustion products is in any case ensured;

FOR GERMANY ONLY
The product can be connected to a shared flue (multi-connection) provided that the requirements of the regional and national regulations, amongst which DIN EN 13384-2, DIN V 18160-1, DIN 18896 and of the MFeuV-2007 (Muster-Feuerungsverordnung) are strictly complied with, and that the local chimney sweep has checked and approved the installation conditions.
Please also remember the following indications, which the end user must comply with:
- The device can be operated only with the doors closed.
- The doors and all setting devices must remain closed when the device is not on (except for cleaning and maintenance operations).

EXAMPLES OF CORRECT CONNECTION TO THE CHIMNEY

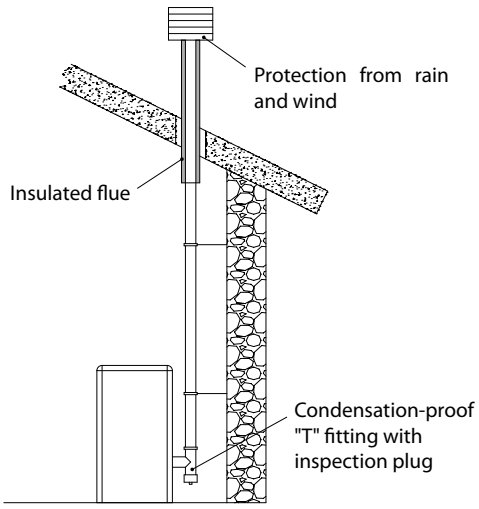

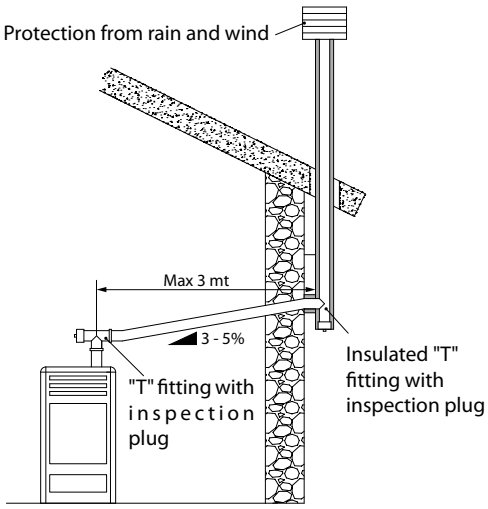

CONNECTION TO THE MAINS ELECTRIC SUPPLY
The generator is supplied with an electric power cable to be plugged into a 230V 50 Hz socket, possibly with a circuit breaker switch. The socket must be easily accessible.
The electrical system must be compliant with standards. The efficiency of the earthing circuit must be checked. Unsuitable earthing of the system can cause malfunctioning for which the manufacturer will not be held liable.
Power supply variations beyond 10% can cause faulty operation of the product.

HERMETICALLY SEALED INSTALLATION

The generator is a fully sealed product with respect to the environment in which it is installed. This means that it is ideal for passive houses because it does not take air in from within the house.

COMBUSTION AIR

To ensure the stove remains hermetically sealed, the connection pipe for the combustion air must be directly connected to the exterior, using special pipes and sealed connectors.
For an hermetic installation is necessary to contact a qualified installer.

FUMES EXHAUST SYSTEM

- If the generator has a fumes temperature of less than 160°C+ room temperature due to the high performance (refer to technical data), the fumes exhaust system must be completely waterproof.
- If there is a possibility that fumes may condense, an external inspection hatch must be fitted.

INSTALLATION EXAMPLE

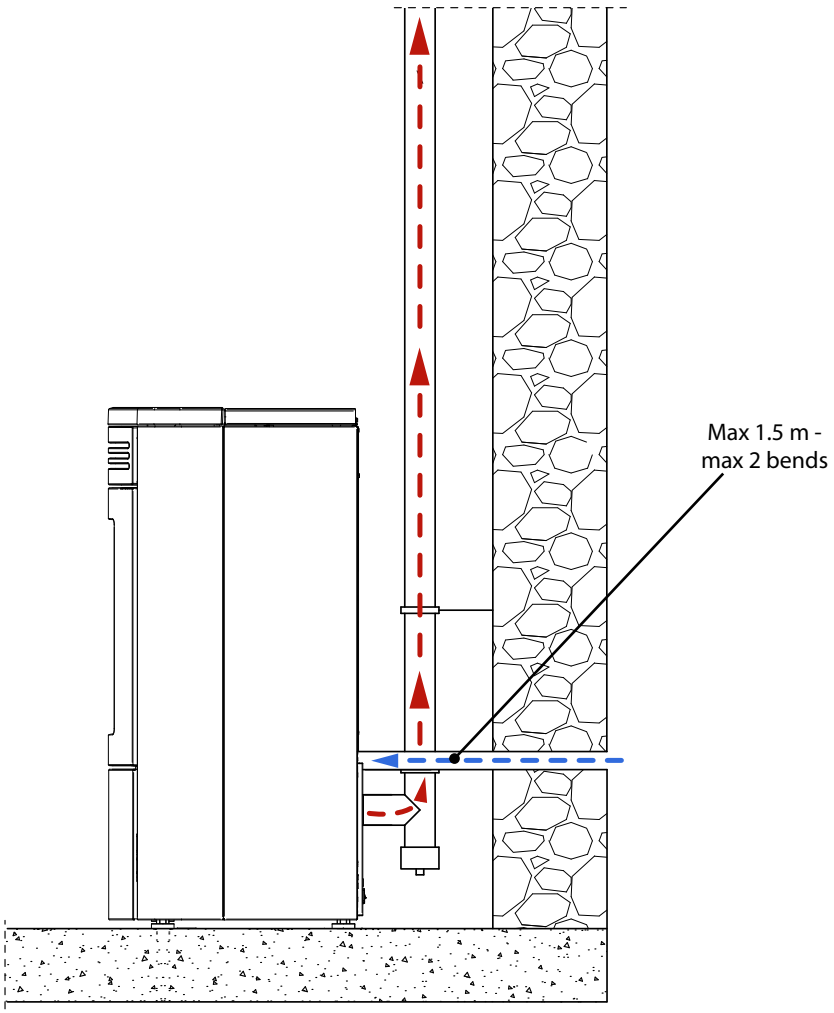

One must also bear in mind all laws and national, regional, provincial and town council standards present in the country in which the appliance has been installed, as well as the instructions in this manual.

HYDRAULIC SYSTEM

Certain concepts referring to the Italian Standard UNI 10412-2 (2009) are described in this chapter.
As previously described, when installing, all national, regional, provincial and council Standards in force provided by the country in which the appliance has been installed must be complied with.
During installation of the generator it is MANDATORY to adjust the system with a manometer in order to display the water pressure.

TABLE OF SAFETY DEVICES FOR CLOSED VESSEL SYSTEM AND NOT PRESENT IN THE PRODUCT	
Safety valve	✓
Pump control thermostat (it is managed by the water probe and the board program)	✓
Water temperature indicator (display)	✓
Pressure transducer with display	✓
Automatic circuit breaker adjustment switch (managed by board program)	✓
Pressure transducer with minimum and maximum pressure switch alarm	✓
Water overheating automatic circuit breaker switch (block thermostat)	✓
Circulation system (pump)	✓
Expansion system	✓

Pay attention to the correct sizing of the system:

- generator power compared to the thermal requirement
- possible need for a buffer tank

INSTALLATION AND SAFETY DEVICES

The installation, relative system connections, commissioning and inspection of correct functioning must be carried out perfectly, in full compliance with Standards in force, national, regional and municipal, as well as these instructions. For Italy, installation must be carried out by professionally qualified staff (Ministerial Decree dated 22.01.08 n°37).
Extraflame S.p.A. declines all responsibility for damage to objects and/or persons caused by the system.

TYPE OF SYSTEM

- There are 2 different types of system:
- Open vessel system and closed vessel system.
- The product has been designed and made to work with closed vessel systems.

CHECK THAT THE PRELOAD OF THE EXPANSION VESSEL IS SET TO 1.5 BAR.

SAFETY DEVICES FOR CLOSED VESSEL SYSTEM

In accordance with the UNI 10412-2 (2009) regulation in force in Italy, all the closed systems must be fitted with: safety valve, pump control thermostat, temperature indicator, pressure indicator, automatic circuit breaker block switch (block thermostat), circulation system, expansion system, and safety dissipation built-in to the generator with thermal safety valve (self-activated), if the appliance does not have a temperature self-adjustment system.

DISTANCES OF SAFETY DEVICES ACCORDING TO THE STANDARD

The temperature safety sensors must be in place on the machine at a distance no greater than 30 cm from the flow connection. Whenever the generators lack a device, those missing can be installed on the generator flow pipe, within a distance no greater than 1 m from the machine.

COMMISSIONING CHECKS

Before connecting the boiler:
a) wash all system piping thoroughly in order to remove any residues which might compromise the correct functioning of certain system components (pumps, valves, etc.).
b) The company recommends installing a magnetic filter in the generator return, to increase the operational life of the boiler, make it easier to remove impurities and increase the overall efficiency of the system.
It is also advisable to perform an inspection using appropriate instruments, to check for any stray currents that may cause corrosion.
c) check to verify that the flue has adequate draught, that it is not narrowed and that other appliances do not discharge into the flue. This is to prevent unexpected power increases. The flue fitting can be mounted between the boiler and the flue only after this inspection. An inspection of the connections with pre-existing flues is recommended.

ANTI-CONDENSATION DEVICE (MANDATORY)

Make sure a suitable anti-condensate circuit has been realised, which guarantees an appliance return temperature of at least 55°C. The automatic thermostatic valve, for instance, is used in solid fuel boilers as it prevents cold water from returning into the exchanger. A high return temperature allows efficiency improvement, reduces formation of smoke condensation and prolongs the generator's life span. The manufacturer recommends using the 55°C model with 1" hydraulic connections.

For the products with the *PWM pump control thermostat, installation is considered equivalent to the realisation of a suitable anti-condensate circuit in the case where::
- the heat generator pump is the only one in the installation, or
- there is a plate heat exchanger between the heat generator and the installation, or
- there is a hydraulic compensator or an inertial storage tank (buffer) between the heat generator and the installation

***Check technical data sheet on website.**
Valve on sale as an accessory (optional)

FIANDRA IDRO EVO DETAILS

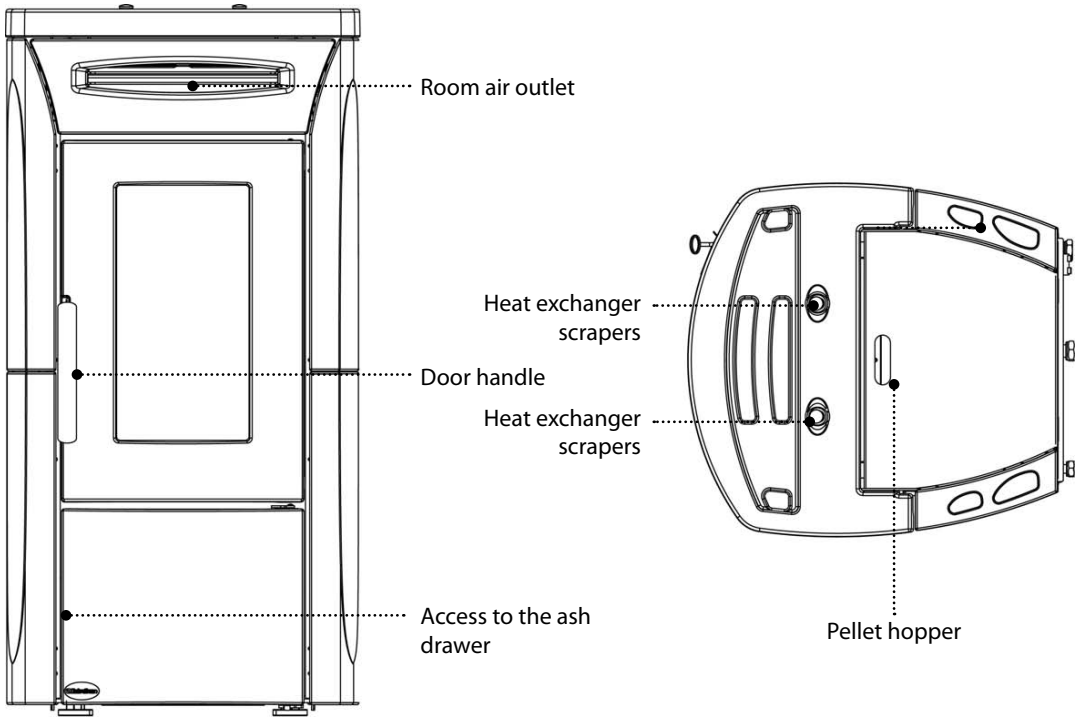

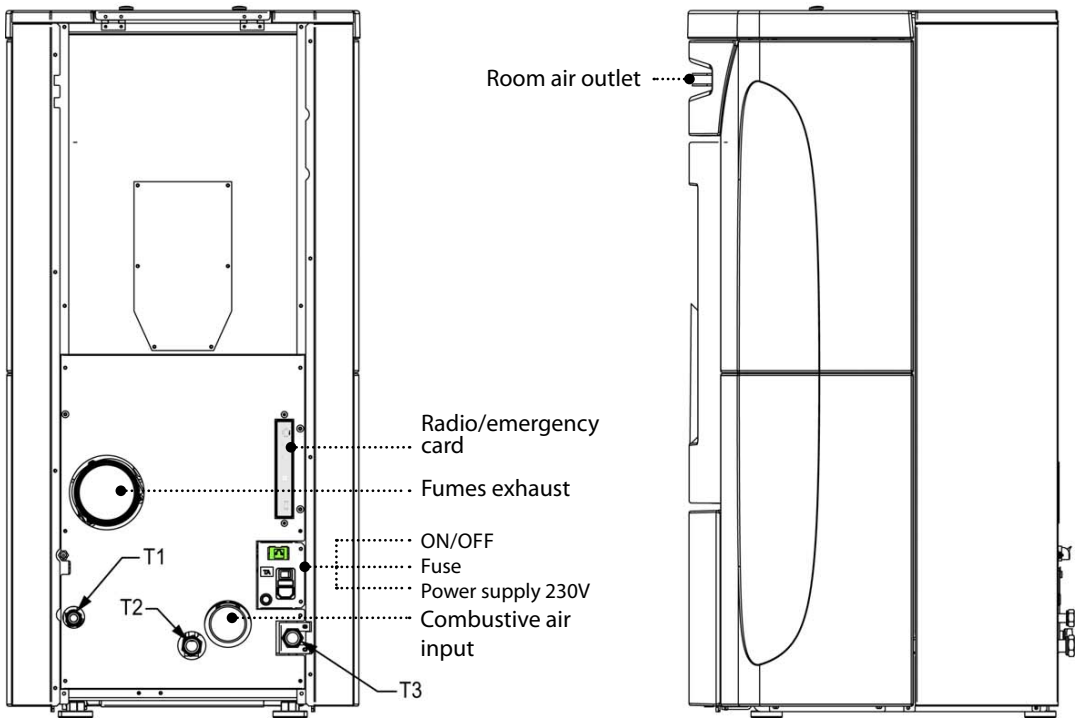

HYDRAULIC INSTALLATION	
T1	3 bar safety drain
T2	Boiler flow/output
T3	Boiler return/input

FEATURES	
Water content of the thermo-product heat exchanger (l)	16
Volume of expansion vessel integrated into thermo-product (l)	*6
3 bar safety valve integrated into the thermo-product	YES
Minimum and maximum pressure switch integrated into the thermo-product	YES
Pump integrated into the thermo-product	YES
Pump max. head (m)	6

* **ENVISION ANY INTEGRATIVE EXPANSION VESSEL ON THE BASIS OF THE SYSTEM WATER CONTENT.**

The diagram at the side illustrates the behaviour of the pump used on our thermo-products at the speeds that can be set.

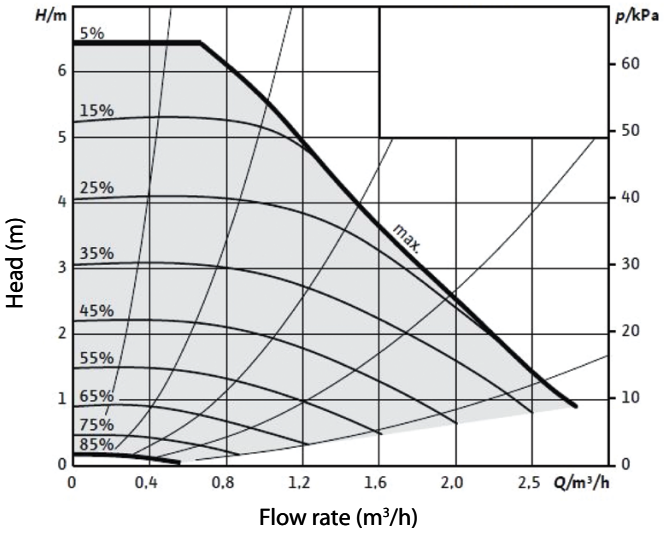

CHECKS AND MEASURES FOR COMMISSIONING

CAUTION!
FOR CORRECT GENERATOR OPERATION, THE HYDRAULIC SYSTEM PRESSURE MUST BE BETWEEN 0.6 AND 2.5 BAR.

Whenever the pressure detected by the digital pressure switch is lower than 0.6 or over 2.5 bar, the boiler goes into alarm mode.
By taking the pressure of the water within standard values, the alarm can be reset by pressing the ⏻/1 key for 3 seconds
(The alarm can be reset only if the fumes motor has stopped and 15 minutes have passed since the alarm was displayed)

THE PELLET LOAD MOTOR DOES NOT FUNCTION:

It is normal that there is air inside the circuit due to filling the system.
On the 1st ignition cycle, the movement of the water causes the air bubbles to move and be bled by the system automatic venting. This can cause the pressure to drop and the minimum pressure switch to intervene, which interrupts operation of the pellet conveying motor and therefore operation of the heat generator.

The system must be bled several times to eliminate the air and loaded when the pressure is too low.
It is not an anomaly, but normal phenomenon, due to filling. Following filling, the system must always be bled using the relevant vents in the circuit and having the machine perform the "air vent" function. (Following commissioning and with the machine cold, activate the "air vent" function again. - see "*SETTINGS*" chapter)

BULB THERMOSTATS - REARM

Check by pressing rearm , before contacting a technician (see REARM chapter).

STOVE POSITIONING

For correct product functioning, it is recommended to position it in a way that it is perfectly level, with the aid of a spirit level.

NOTE FOR CORRECT OPERATION

The following indications must be respected for correct pellet stove operation:

Both during the functioning and when the stove is not in use, all the machine doors (pellet hopper, fire door, ash drawer) must always remain closed. The machine doors can only be opened for the time required to load the pellet and for maintenance.
Failure to comply with that above during operation will cause the display to show the following:

"CLOSE HOPPER - STOVE DOOR"

This indication means that you have 60" to close the hatch/door and the pellet lid.

If this is not the case, during ignition the stove will go to "DEPRESSION ALARM" mode, while during normal operation the stove will go to "COOLING WAIT" mode and then re-start automatically when the correct conditions are present (stove cold, etc.).

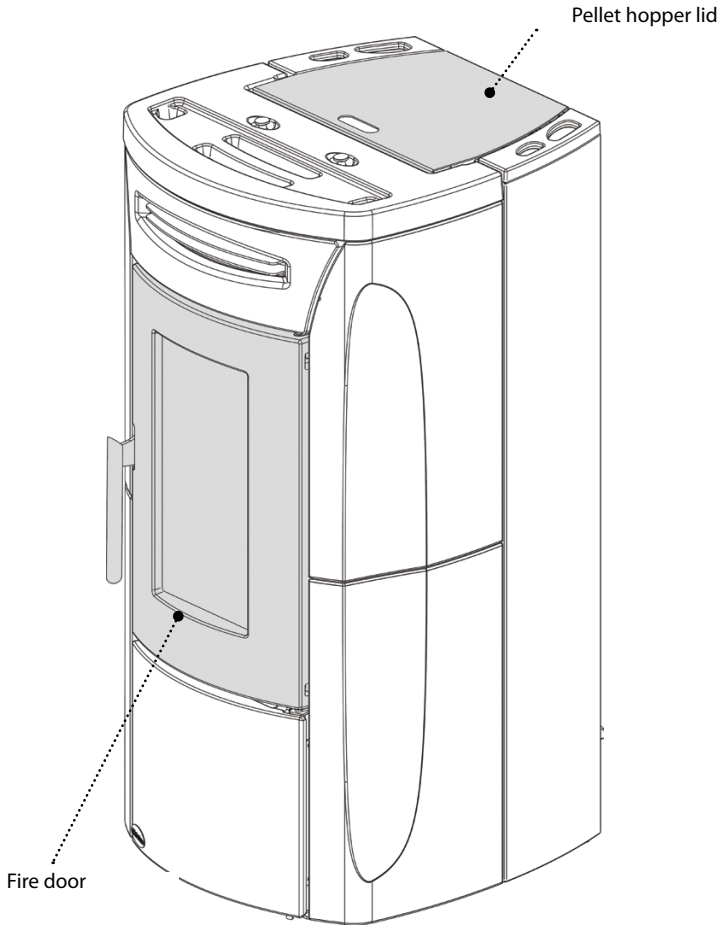

REARM

The figure below shows the rearm position. It is recommended to contact the qualified technicianif one of the rearms should be triggered, so as to verify the cause.

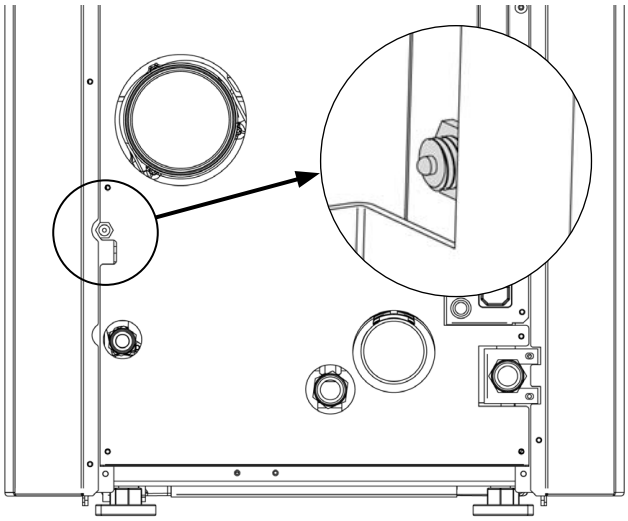

FUSE

If the stove is not powered, it is recommended to have the fuse checked by a qualified technician

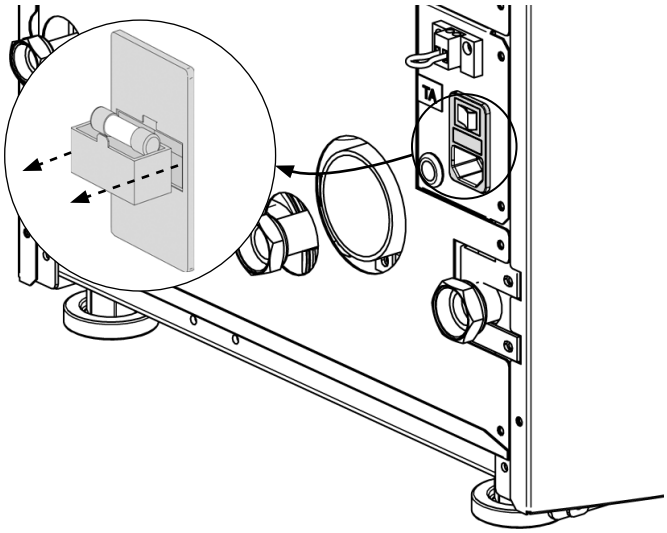

PELLETS AND FEEDING

Pellets are made by subjecting wood shavings i.e. the rejects of pure wood (without paint) sawmill, carpenter products and products from other activities connected to working and transforming wood, to very high pressures.
This type of fuel is fully ecological as no glues are used to hold it together. In fact, the compactness of the pellets is guaranteed over time by a natural substance that is found in wood: wood coal.
As well as being an ecological fuel, as wood residues are made the most of, the pellet also has technical advantages.
While the wood has a calorific value of 4.4 kWh/kg. (with 15% humidity, then after about 18 months of seasoning), that of the pellet is 5 kWh/kg. Pellet density is about 650 kg/m^3 and water content is equal to 8% of its weight. For this reason the pellets do not need to be seasoned in order to obtain a sufficiently adequate heat yield.

The pellets used must be class **A1** certified according to standard **ISO 17225-2** (**ENplus-A1, DIN Plus** or **NF 444** of the following category: "High quality NF biocombustible wood pellets").

UNI EN 303-5 with the following characteristics: water content ≤ 12%, ash content ≤ 0.5% and lower calorific value >17 MJ/kg (in the case of boilers).

The Manufacturer recommends using pellets with a diameter of 6mm with its products.

PELLET STORAGE

To guarantee combustion without problems, the pellets must be kept in a dry place.
Open the tank lid and load the pellets using a scoop.

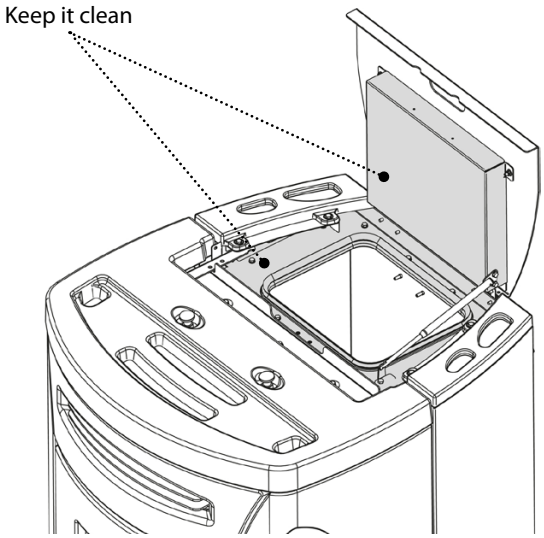

THE USE OF POOR QUALITY PELLETS OR ANY OTHER MATERIAL DAMAGES THE FUNCTIONS OF THE GENERATOR AND CAN VOID THE WARRANTY AND THE ANNEXED RESPONSIBILITY OF THE MANUFACTURER.

PELLET TANK

During the operation of the stove, the pellet tank cover must always remain closed.

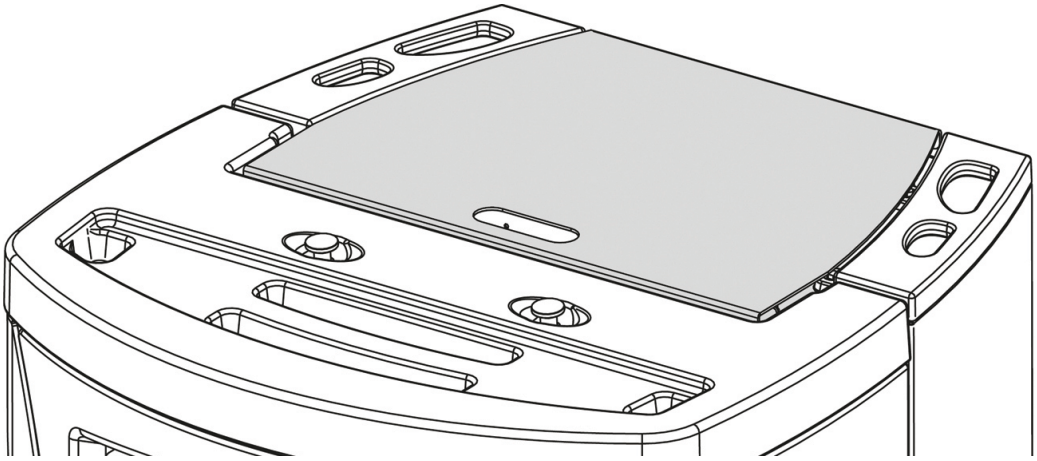

DO NOT PLACE THE BAG DIRECTLY ON THE STOVE TO LOAD THE TANK.
ALWAYS USE A SCOOP TO LOAD THE TANK. DO NOT RUB OR PLACE WEIGHTS ON THE TANK SEAL. KEEP THE TANK COVER SEAL SUPPORTING SURFACE CLEAN AT ALL TIMES. CHECK THE CONDITIONS OF THE SEAL FREQUENTLY. IF DAMAGED, CONTACT YOUR LOCAL AUTHORISED TECHNICIAN.

RADIO/EMERGENCY CARD

The stove is fitted with an emergency radio card allowing the basic operation of the stove in the event the LCD handheld remote is damaged or malfunctions.

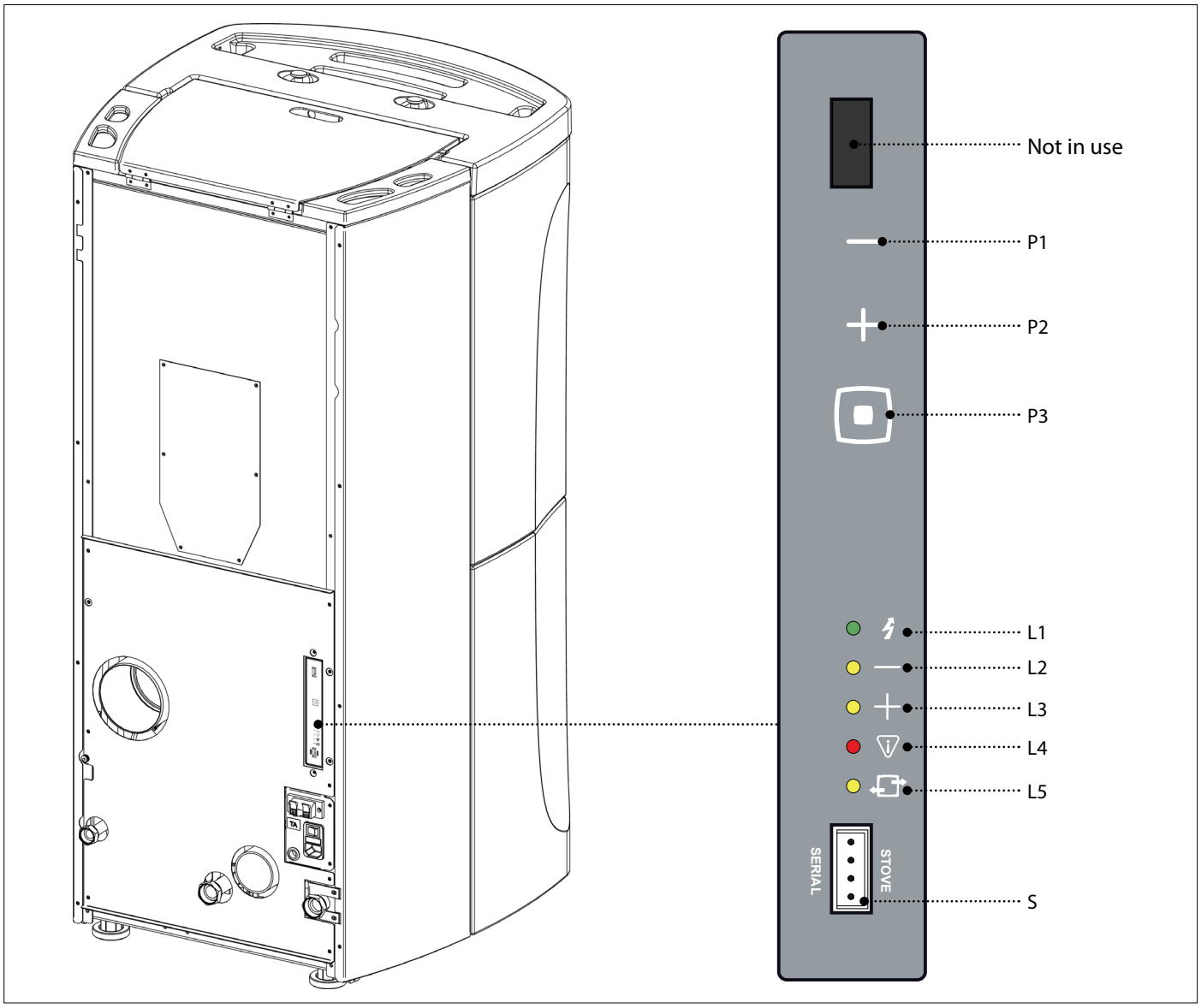

The functions that can be managed from the emergency card are:

L1	Power supply presence	**P1**	Power decrease
L2	LED off: stove off LED on with fixed light: stove in P1-2-3 and working Flashing LED: stove in P1-2-3 and in switch-off/alarm/stby	**P2**	Power increase
L3	LED off: stove off LED on with fixed light: stove in P3-4-5 and working Flashing LED: stove in P3-4-5 and in switch-off/alarm/stby	**P3**	On/off stove.
L4	Led off: normal operation. Led on: alarm present.		
L5	Led off: radio communication not available. Led on: radio communication available.		
S	-		

RADIO CONTROL DEVICE

CONFIGURATION

RADIO CONTROL DEVICE CODING PROCEDURE:

1. Disconnect the power supply to the stove.
2. Press the keys [■] and **OK** at the same time until the *UNIT* selection screen appears.
3. Using keys ∧ and ∨ select the new *UNIT*.
4. Power the stove. Within 10 seconds (the LED on the emergency module will flash) confirm the selected unit by pressing **OK** on the radio control device.
5. The LED on the emergency module will remain on for 5 seconds to confirm the new configuration.
6. If the configuration was not successful, " " will appear on the display. In this case, repeat the procedure.

THE RADIO CONTROL DEVICE IS ALREADY CONFIGURED WITH "UNIT 0". IF THERE IS ANOTHER STOVE, TO AVOID INTERFERENCES, A NEW CONFIGURATION MUST BE PERFORMED, MODIFYING ONE OF THE TWO STOVES.

SOME RADIO FREQUENCY DEVICES (E.G. MOBILE PHONES, ETC.) MAY CAUSE INTERFERENCE WITH COMMUNICATION BETWEEN THE RADIO CONTROL DEVICE AND THE STOVE.

RADIO CONTROL DEVICE ROOM PROBE CALIBRATION

This mode allows calibration of the room temperature detected by the radio control device (with ventilation active only). For correct calibration, it is recommended to position the radio control in a room with constant temperature and wait for at least two hours. Below find the calibration procedure:

- Access the menu and reach "**TECH MENU**".
- Set the access key "F4". - "**ADJ REMOTE PROBE**"
- Using the keys ∨ or ∧ adjust the desired room calibration.
- Save and exit with the key [■] .

BATTERY TYPE AND REPLACEMENT

To insert/replace the batteries, simply remove the battery protection cover at the back of the radio control device (figure 1). Insert the batteries according to the symbols imprinted on the radio control device and on the battery itself.

3 AAA batteries are required for the radio control device to function.

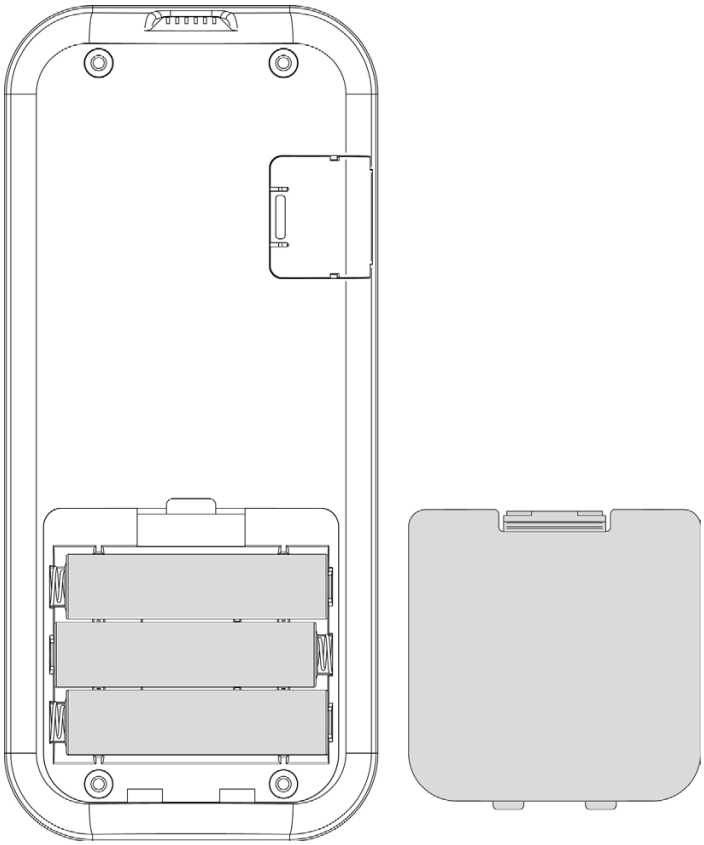

(figure 1)

Respect the environment!
Used batteries contain metals that are harmful to the environment, and therefore must be disposed of separately in special containers.

RADIO CONTROL DEVICE FEATURES

- The radio control device is fitted with an LCD backlit display. The display remains lit for 5 seconds. After a certain period of time, in order to minimise battery consumption, the display turns off (**SLEEP** mode).
- It turns back on after pressing the **ON/OFF** key (6).

CAUTION!

- Do not place the radio control device in direct or indirect contact with water. The radio control device may not work properly in the presence of humidity or if exposed to water.

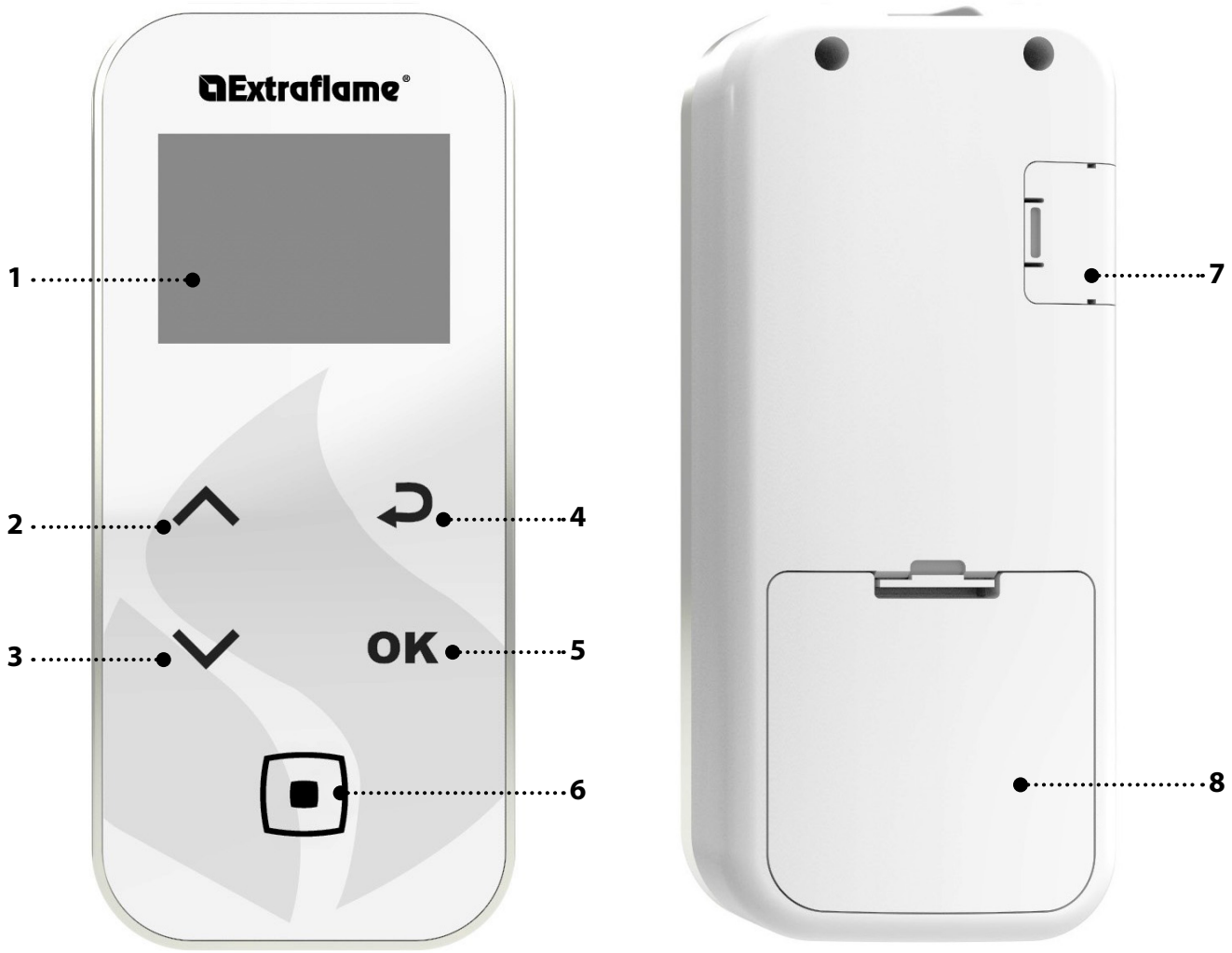

1.	**DISPLAY**
2.	**SET POWER** / scroll across in menus / increase - select a setting
3.	**SET H2O** / scroll across in menus / reduce - deselect a setting
4.	Back key
5.	Key to access MENU and CONFIRM
6.	**ON/OFF** stove or restore from sleep mode.
7.	Serial cable input
8.	Battery compartment

FREQUENCY BANDS	MAXIMUM POWER TRANSMITTED
868.3 MHz	4 mW ERP
869.85 MHz	4 mW ERP

DISPLAY

SCREEN WITH VENTILATION NOT ENABLED

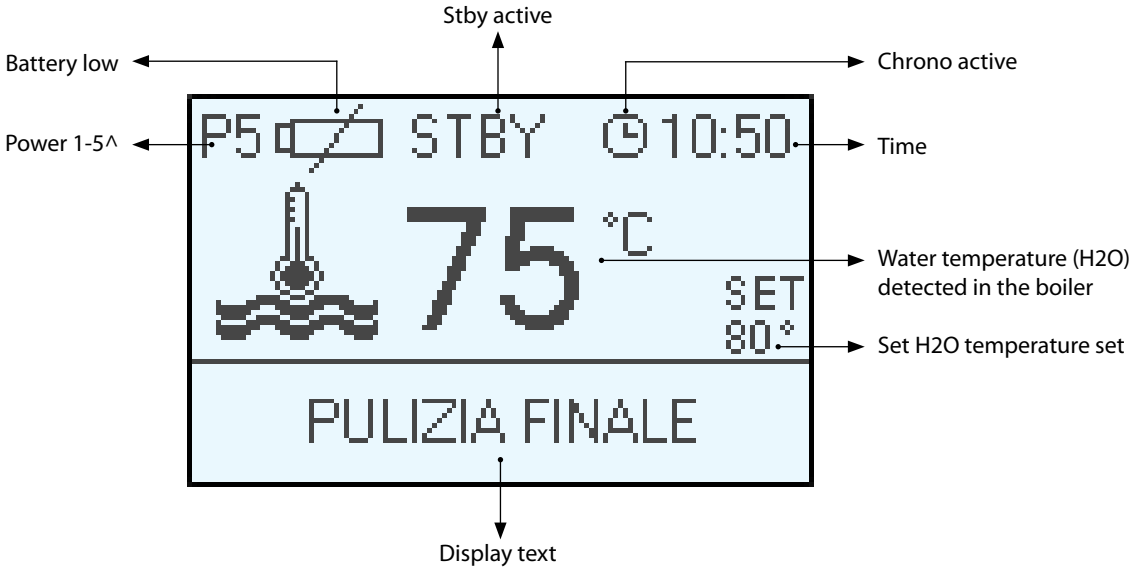

SCREEN WITH VENTILATION ENABLED

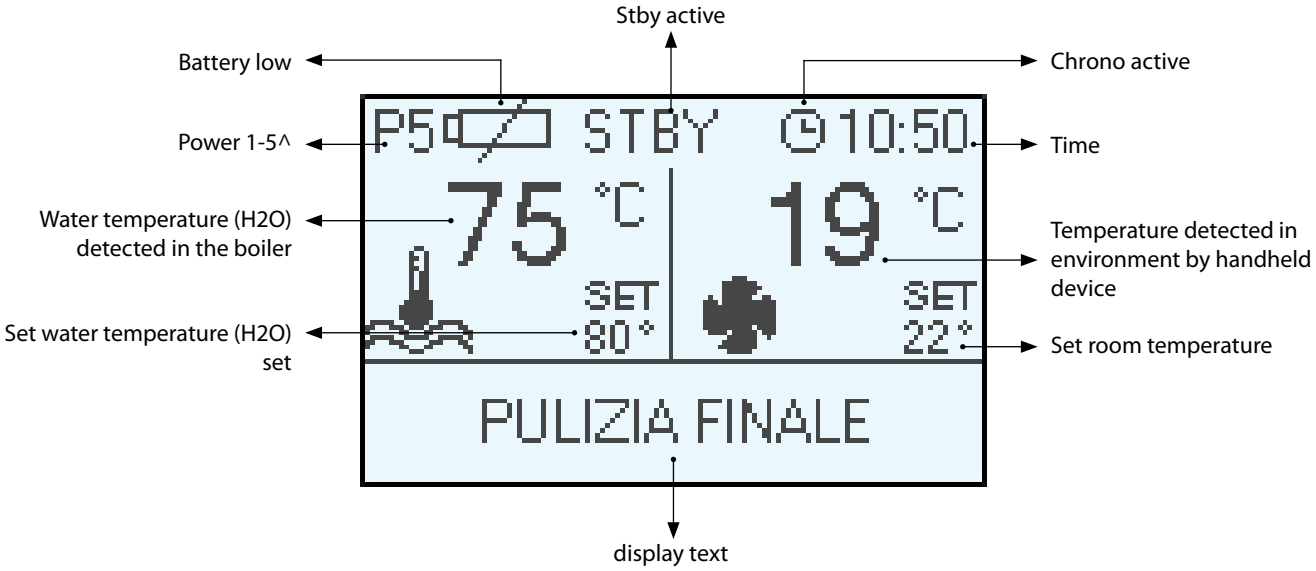

GENERAL MENU

KEY	FUNCTION
∧ ∨	Scroll through parameters Modify settings
■	On - off key

KEY	FUNCTION
↩	Back - exit key
OK	Access menu key

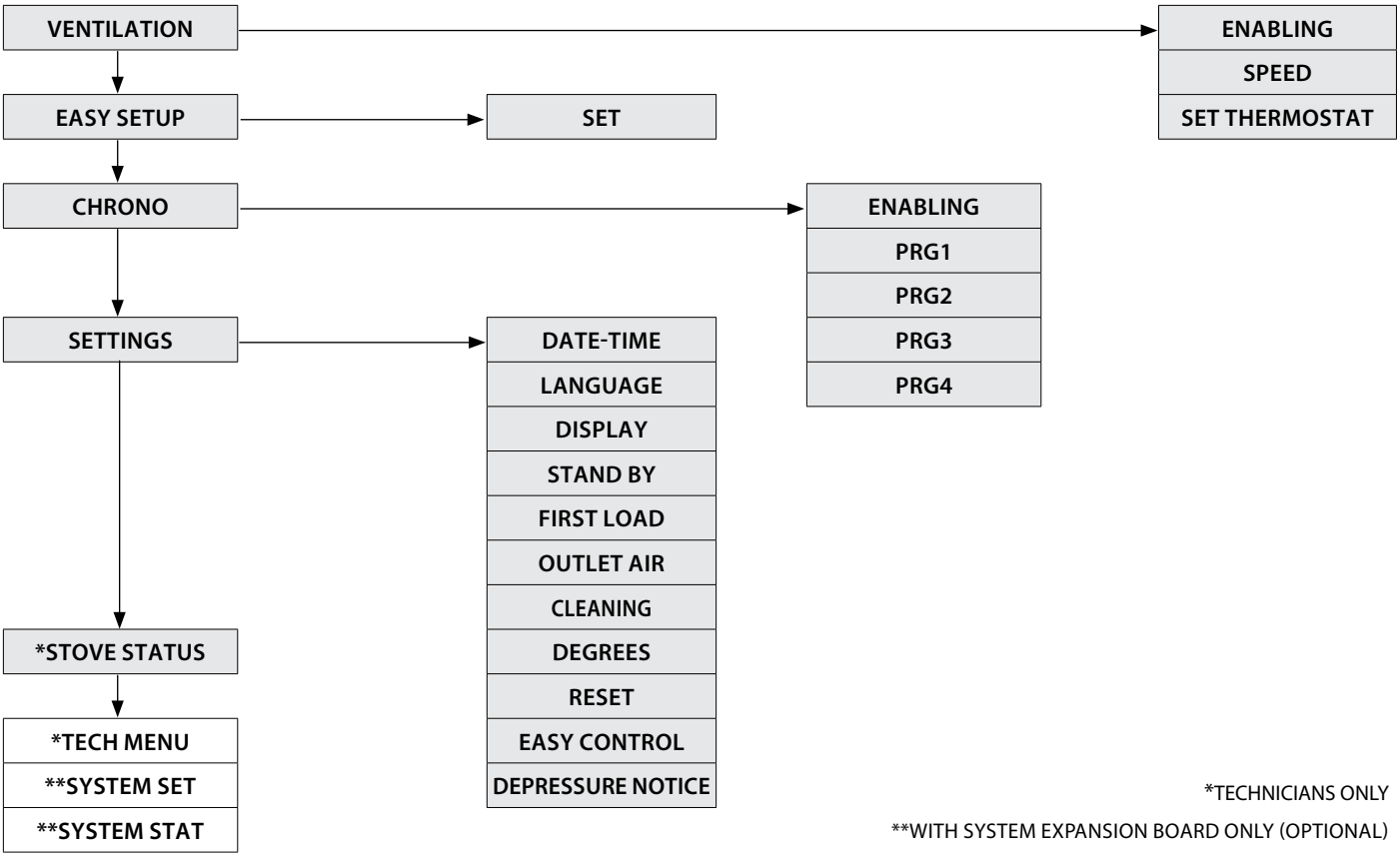

*TECHNICIANS ONLY

**WITH SYSTEM EXPANSION BOARD ONLY (OPTIONAL)

GENERAL WARNINGS

Advice to follow for the first start-ups of the product:
During the first hours of operation, there may be some smoke or odours, but they are due to the normal "thermal break-in" process. During this process, the duration of which changes depending on the product, it is recommended to:

- Ventilate the room well
- If present, remove any majolica or natural stone parts from the top part of the product
- Activate the product at the maximum power and temperature
- Avoid remaining in the room for a long time
- Do not touch the surfaces of the product

Notes:
The process is completed after a few heating/cooling cycles.
For combustion, do not use elements or substances other than those indicated in the manual.

Before turning on the product, it is necessary to perform the following checks:

- If it is intended to be connected to a hydraulic system, it must be complete and fully functional and in compliance with the instructions given in the product manual and with the relevant regulations in force.
- The pellet hopper must be fully loaded
- The combustion chamber and the burn pot must be clean
- Make sure that the fire holder, the ash drawer and the pellet hopper close hermetically (if present in the hermetic version); they must be closed and there must be no foreign bodies in the sealing elements and gaskets.
- Check that the power cord is properly connected
- The bipolar switch (if present) must be set to position "1".

DO NOT USE ANY TYPE OF FLAMMABLE LIQUIDS FOR IGNITION!
DO NOT ALLOW THE BAG OF PELLETS TO COME INTO CONTACT WITH THE BOILING HOT STOVE DURING THE FILLING PHASE!
IN THE EVENT OF CONTINUED FAILURE TO LIGHT, CONTACT AN AUTHORISED TECHNICIAN.

FIRST IGNITION SETTINGS

Once the power cable at the back of the generator has been connected, move the switch, also located on the back, to (I).

The switch at the back of the generator powers the generator board.
The generator remains off and an initial screen appears on the panel, displaying OFF.

DATE-TIME
This menu allows the date and time to be set.

To set: OK > *SETTINGS* > *DATE-TIME*

LANGUAGE
This menu allows the preferred language to be selected.

To set: OK > *SETTINGS* > *LANGUAGE*

The languages available are: Italiano - English - Deutsch - Français - Español - Português - Dansk - Eesti - Hrvatski - Slovenscina - Nederlands - Polski.

DEGREES
This menu allows you to set the desired unit of measurement.

To set: OK > *SETTINGS* > *DEGREES*

NO IGNITION

THE APPLIANCE MAY FAIL TO LIGHT BECAUSE THE AUGER IS EMPTY AND NOT ALWAYS ABLE TO LOAD THE BURN POT FAST ENOUGH WITH THE PELLETS NEEDED FOR NORMAL IGNITION.
IF THE PROBLEM OCCURS AFTER ONLY A FEW MONTHS OF OPERATION, CHECK THAT THE ROUTINE CLEANING DESCRIBED IN THE STOVE HANDBOOK HAS BEEN CARRIED OUT CORRECTLY

IT IS FORBIDDEN TO USE THE APPLIANCE WITHOUT THE ASH CONVEYOR.
REMOVAL WILL COMPROMISE THE SAFETY OF THE PRODUCT AND RESULT IN THE IMMEDIATE NULLIFICATION OF THE WARRANTY PERIOD.
IN THE EVENT OF WEAR OR DETERIORATION, ASK THE AFTER-SALES SERVICE TO REPLACE THE PART
(REPLACEMENT DOES NOT FALL WITHIN THE PRODUCT WARRANTY AS THE PART IS SUBJECT TO WEAR).

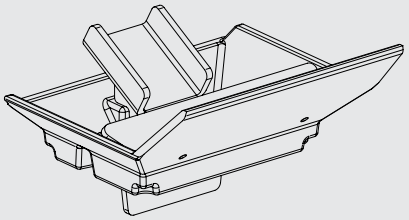

OPERATION AND LOGIC

IGNITION
Once the previously listed points have been checked, press key ■ for three seconds to ignite the stove.
15 minutes are available for the ignition phase. After ignition and after reaching the control temperature, the stove interrupts the ignition phase and switches to PREPARATION.

PREPARATION

During the **PREPARATION** phase, the stove stabilises combustion, increasing it progressively, to then start ventilation and switch to WORK.

WORK

During the work phase, the stove reaches the set power set; see following item.

REGULATION OF SET POWER

The set power has 5 operating levels; when the ∧ key is pressed, the set power is displayed; it can be changed using the ∨ or ∧ keys.
Power 1 = minimum level - Power 5 = maximum level.
The change must be confirmed by pressing the key **OK** .

ADJUSTMENT OF SET H2O TEMPERATURE

Set the boiler temperature from 65 - 80°C (set using keys 4 - 5). Press the ∨ key to display the temperature set; this can be modified using the ∨ or ∧ keys.
The change must be confirmed by pressing the key **OK** .

PUMP OPERATION

The pump activates water circulation when the t° of the water inside the stove reaches approx. 60°C. As the pump always functions above 60°, it is recommended to keep a heating area open at all times to allow for uniform operation, preventing blocks due to overheating. Normally this area is defined as the "safety zone".

ROOM TEMPERATURE (in the models envisioned)

IT IS possible to activate/deactivate the front ventilation and control the room temperature via the Room probe (integrated in the handheld device). (See the chapter "ventilation" on the following pages.)

BURN POT CLEANING

During the working phase, the stove has an internal timer, which after a pre-set period of time cleans the burn pot.
This phase is shown on the display, it interrupts pellet loading and increases the fumes exhaust motor for a certain period of time. When the cleaning phase is finished, the stove will re-start automatically and continue the working phase, returning to the selected power level.

MODULATION and H-OFF

As the water temperature approaches the set point, the boiler starts to modulate automatically bringing itself to the minimum power. If the temperature increases beyond the set point, it will automatically switch off indicating **H-OFF** and will automatically go back on when the temperature drops below the set point.

SWITCH-OFF

Press the ■ key for three seconds.
Once this operation has been performed, the appliance automatically enters the switch-off phase, blocking the supply of pellets.
The flue gas exhaust motor and the hot air flow motor will remain on until the stove temperature has dropped below the default parameters.

REIGNITION

The stove can only be re-ignited automatically or manually when the cooling cycle conditions and the preset timer have been satisfied.

ADDITIONAL THERMOSTAT

N.B. : INSTALLATION MUST BE PERFORMED BY AN AUTHORISED TECHNICIAN

It is possible to control the temperature of a room adjacent to the room where the stove is positioned; simply connect a thermostat following the procedure described in the following section (it is advisable to place the optional mechanical thermostat at a height off the ground equal to 1.50 m). Stove operation with the external thermostat connected in the clamp TA can be different depending on the activation or deactivation of the STAND BY function.
By factory default, the clamp TA **is jumpered, therefore it always has closed contact (on request).**

ADDITIONAL THERMOSTAT FUNCTIONING WITH STAND BY ACTIVE

When the STAND BY function is active, the STBY icon will be on. When the contact or external thermostat is not satisfied (open contact / temperature reached), the stove will switch off. As soon as the contact or external thermostat switches to the "not satisfied" status (closed contact / temperature to be reached) it will re-ignite.
NB: stove operation depends on the temperature of the water inside the stove and relative factory setting restrictions. If the stove is in H-OFF (water temperature reached), any additional contact or thermostat request will be ignored.

ADDITIONAL THERMOSTAT OPERATION WITH STAND BY DEACTIVATED

When the STAND BY function is not active, the STBY icon will be off.
When the contact or external thermostat is satisfied (open contact / temperature reached), the stove will go to minimum. As soon as the contact or external thermostat switches to the "not satisfied" status (closed contact / temperature to be reached) the stove will start to work again at the pre-set power.
NB: stove operation depends on the temperature of the water inside the stove and relative factory setting restrictions. If the stove is in H-OFF (water temperature reached), any additional contact or thermostat request will be ignored.

ADDITIONAL THERMOSTAT INSTALLATION

- Switch the appliance off using the master switch positioned at the back of the stove.
- Remove the plug from the socket.
- Refer to the wiring diagram and connect the two thermostat wires in the relevant terminals located on the back of the stove, one red and one black (clamp TA). **Each model may have a different terminal location on the back of the stove. The image is given as an example.**

TO ACTIVATE STAND-BY, REFER TO THE "SETTINGS" CHAPTER

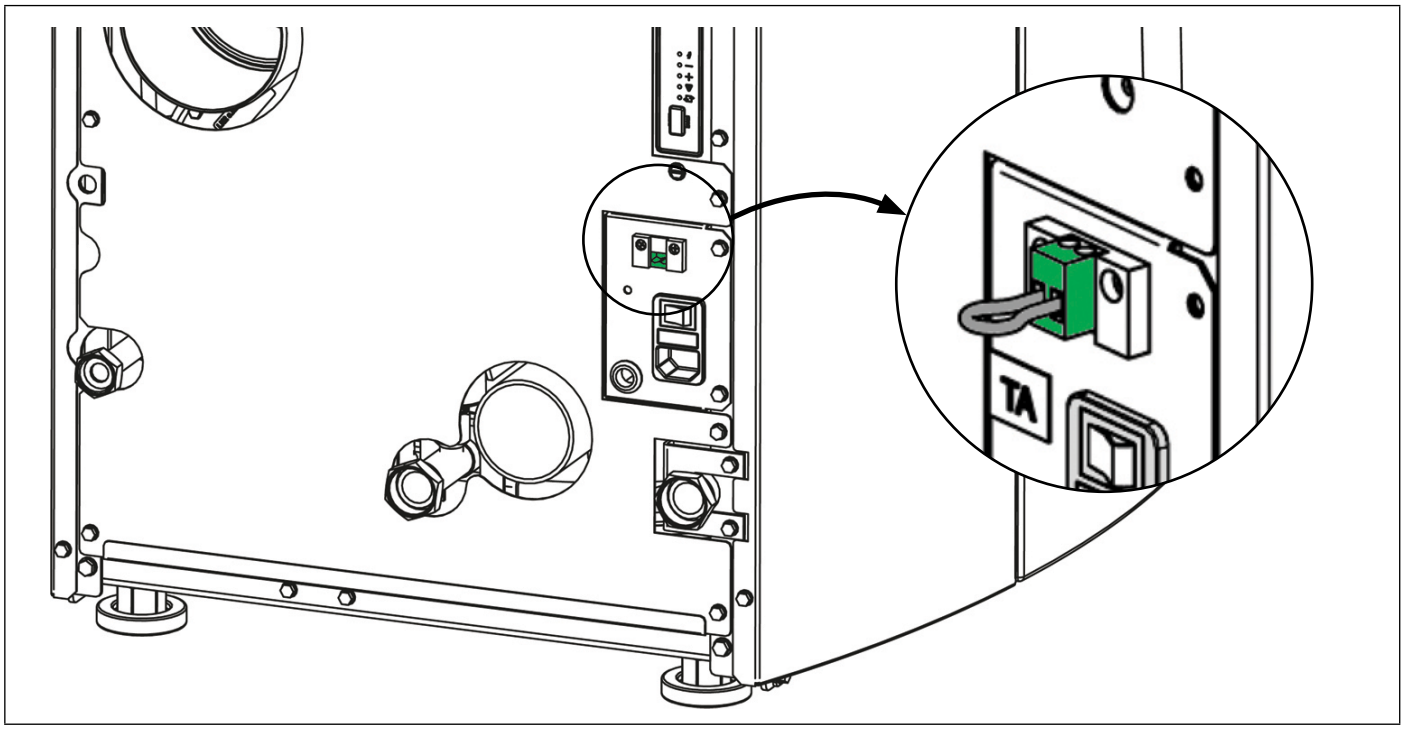

VENTILATION

This menu allows to enable or disable the operation of the tangential motor and to adjust the speed (-2, -1, 0, +1, +2) of the front fan.
The **SET THERMOSTAT** allows to set the room temperature to be reached (front ventilation must be active).
Once the temperature set in **SET TEMPERATURE** has been reached, the ventilation will turn OFF and then it will turn back on when required.
Range: 07 - 37°C.

ENABLING CONTROLS PROCEDURE

- *OK >VENTILATION> ENABLING > SET*

SPEED CONTROLS PROCEDURE

- *OK >VENTILATION> SPEED > SET*

SET THERMOSTAT CONTROLS PROCEDURE

- *OK >VENTILATION> SET THERMOSTAT > SET*

EASY SETUP

The volumetric weight of the pellet is the ratio between the weight and the volume of the pellet. This ratio may change without altering pellet quality. By using the EASY SETUP function, it is possible to change the calibration of the volumetric weight by increasing or decreasing the preset values.
In the stove program, the available values range from "– 3" to "+ 3"; all stoves are calibrated during production with the optimal value which is 0

If you notice an excessive deposit on the burn pot, access the EASY SETUP program and lower the value by one unit to "- 1"; then wait until the next day and if there is no improvement, decrease again, to a maximum of "- 3". Instead, if it is necessary to increase the calibration of the volumetric weight of the pellet, change the factory value from "0" to "+ 1, + 2, + 3" as required.

To set: *OK > EASY SETUP*

EXCESSIVE PELLET DEPOSIT IN BURN POT			**NORMAL OPERATION**	**MINIMUM PELLET DEPOSIT IN BURN POT**		
-3	**-2**	**-1**	**0**	**+1**	**+2**	**+3**
THIRD DECREASE RANGE IF THE FIRST TWO ARE INSUFFICIENT	SECOND DECREASE RANGE IF THE FIRST IS INSUFFICIENT	FIRST DECREASE RANGE (TEST FOR 1 DAY)	OPTIMAL FACTORY VALUE	FIRST INCREASE RANGE	SECOND INCREASE RANGE IF THE FIRST IS INSUFFICIENT	THIRD INCREASE RANGE IF THE FIRST TWO ARE INSUFFICIENT

N.B.: IF THESE ADJUSTMENTS DO NOT SOLVE THE PROBLEM OF PELLET DEPOSITS IN THE BURN POT, PLEASE CONTACT YOUR LOCAL SERVICE CENTRE.

CHRONO

This function allows stove ignition and switch-off to be automatically programmed.
The factory setting for CHRONO is off.
The chrono allows the programming of 4 time slots per day, which can be used every day of the week. **For each time slot, it is possible to set ignition and switch-off times, specific days of application, desired temperature and set power. Current day and time settings are essential for the correct operation of the Chrono.**

Recommendations
Before using the chrono function, you must set the current date and time, so check that you have followed the points listed in the sub-chapter "DATE-TIME". To use the chrono function correctly, it must not only be programmed, but also enabled. The 4 time slots can be overlapped using the ignition and switch-off time settings. In this way, it is possible to create a combination of time slots with different temperatures and power levels, without changing the status of the stove.
N.B.: in the case of overlapping time slots, the stove will remain on until the last switch-off time.

ENABLING

Allows the chrono and the different stove time slots to be enabled/disabled.

To set: *OK* > *CHRONO* > *ENABLING*.

PRG 1-4

The switch-on and switch-off time along with the days of use of the programmed time slot and the desired water temperature (65 - 80°C) can be set. Current day and time settings are essential for the correct operation of the Chrono.

To set: *OK* > **SET CHRONO** > **SET PRG1-4**.

CHRONO	>	**ENABLING**	>	**PRG1**	*ON/OFF*	*Enable/disable PRG 1*
		v		**PRG2**	*ON/OFF*	*Enable/disable PRG 2*
		v		**PRG3**	*ON/OFF*	*Enable/disable PRG 3*
		v		**PRG4**	*ON/OFF*	*Enable/disable PRG 4*
		PRG1	>	**START PRG1**	*OFF-00:00*	*Ignition time PRG1*
		v		**STOP PRG1**	*OFF-00:00*	*Switch-off time PRG1*
		v		**MONDAY...SUNDAY**	*ON/OFF*	*Enable/disable the days of PRG1*
		v		**SET PRG1**	*65°C - 80°C (149°F - 176°F)*	*SET H2O PRG1*
		v		**POWER PRG1**	*1-5*	*Set power PRG1*
		PRG2	>	**START PRG2**	*OFF-00:00*	*Ignition time PRG2*
		v		**STOP PRG2**	*OFF-00:00*	*Switch-off time PRG2*
		v		**MONDAY...SUNDAY**	*ON/OFF*	*Enable/disable the days of PRG2*
		v		**SET PRG2**	*65°C - 80°C (149°F - 176°F)*	*SET H2O PRG2*
		v		**POWER PRG2**	*1-5*	*Set power PRG2*
		PRG3	>	**START PRG3**	*OFF-00:00*	*Ignition time PRG3*
		v		**STOP PRG3**	*OFF-00:00*	*Switch-off time PRG3*
		v		**MONDAY...SUNDAY**	*ON/OFF*	*Enable/disable the days of PRG3*
		v		**SET PRG3**	*65°C - 80°C (149°F - 176°F)*	*SET H2O PRG3*
		v		**POWER PRG3**	*1-5*	*Set power PRG3*
		PRG4	>	**START PRG4**	*OFF-00:00*	*Ignition time PRG4*
				STOP PRG4	*OFF-00:00*	*Switch-off time PRG4*
				MONDAY...SUNDAY	*ON/OFF*	*Enable/disable the days of PRG4*
				SET PRG4	*65°C - 80°C (149°F - 176°F)*	*SET H2O PRG4*
				POWER PRG4	*1-5*	*Set power PRG4*

WHEN THE WEEKLY PROGRAMMER IS ACTIVE, THE RELATIVE ICON WILL BE SHOWN ON THE RADIO CONTROL DISPLAY.

EXAMPLE OF CHRONO OVERLAPPING TIMES/SLOTS

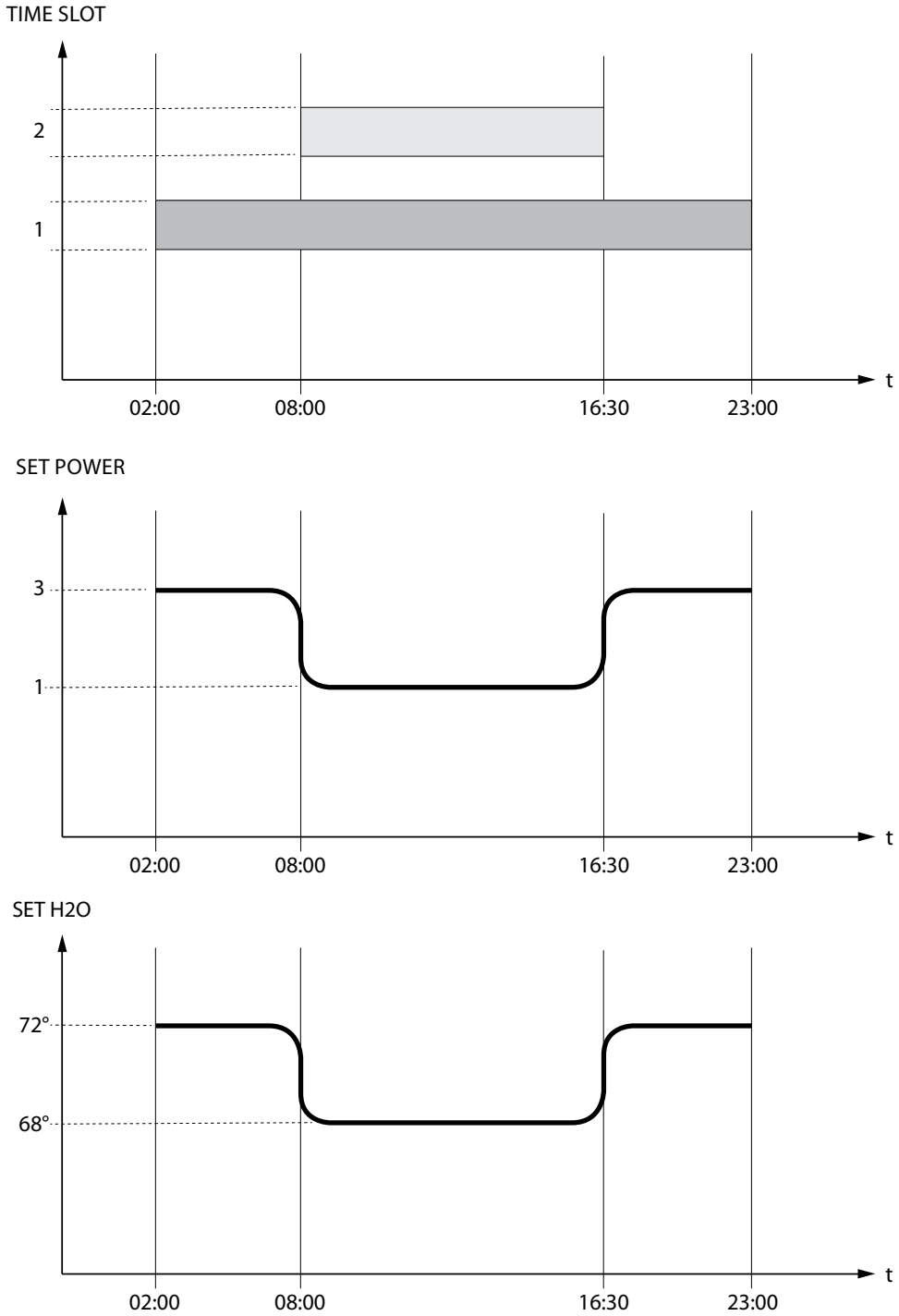

	Time slot 1	Start 02:00 Stop 23:00	Power 3 - SET H2O 72°C
	Time slot 2	Start 08:00 Stop 16:30	Power 1 - SET H2O 68°C
	Stove operation		

SETTINGS

- **DATE-TIME**
- **LANGUAGE**
- **SET DEGREES**

SEE CHAPTER: FIRST IGNITION SETTINGS

DISPLAY

The "**DISPLAY**" menu allows:

- Adjustment of Display contrast.
- Activation/Deactivation of backlight.
- Enabling/disabling of acoustic signal.
- STAND-BY — Setting of the timer to turn off the Display backlight.
- RESET — Setting of the timer to turn off the Display (sleep mode).

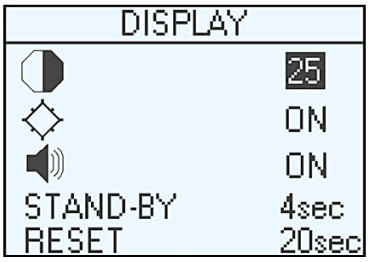

To set: *OK* > *SETTINGS* > *DISPLAY*.

STAND BY

The Stby function is used in the event the stove needs to turn off immediately or modulation via additional thermostat. STBY will be seen on the display, which indicates that the function is active.

To set: *OK* > *SETTINGS* > *STAND BY*.

THIS FUNCTION IS NOT RECOMMENDED FOR ENVIRONMENTS WITH SCARCE THERMAL INSULATION OR WHERE THERE MAY BE SHARP FLUCTUATIONS IN TEMPERATURE: DOORS OR WINDOWS CONSTANTLY OPENED.

FIRST LOAD

This function allows the auger to be filled, thus facilitating first stove ignition phases, or in the event the pellet hopper is empty.
With the stove cold and "OFF", make sure the pellets have been introduced inside the hopper and activate the FIRST LOAD function, then confirm by pressing OK.

To interrupt continuous loading, simply press the key ■ for 3 seconds.
To set: *OK* > *SETTINGS* > *FIRST LOAD*.

REMEMBER ALWAYS TO COMPLETELY EMPTY THE BURN POT BEFORE IGNITION AND THAT THE HOLES IN THE BURN POT ARE ALL FREE. NEVER EMPTY THE BURN POT INSIDE THE PELLET HOPPER, FIRE RISK!

OUTLET AIR

This function allows any air in the stove to be discharged. By activating the pump function, it will be powered alternatively with 30 second work phases and 30" stop for 15 minutes. With the stove cold and in "OFF", activate the OUTLET AIR function, confirming with OK. To interrupt continuous loading, simply press the key ■ for 3 seconds.

To set: *OK* > *SETTINGS* > *OUTLET AIR*

CLEANING

This function allows to open the burn pot base, facilitating the combustion chamber cleaning operations.
With the stove cold and switched "**OFF**", activate the **CLEANING** function.
Once the burn pot bottom has been opened completely, scrape the walls of the combustion chamber using the special tool supplied and let the residual ash drop into the ash drawer.

To set: *OK* > *SETTINGS* > *CLEANING*

Once the cleaning operation has been completed, close the fire door and press the ■ key for 3 seconds to finish and wait for the main screen to reappear.

OPEN THE DOOR ONLY WHEN THE OPERATION IS COMPLETE! THE DISPLAY WILL INDICATE THAT THE DOOR HAS BEEN OPENED!

RESET
Allows the user to reset all editable values to the default values.

To set: *OK > SETTINGS > RESET.*

EASY CONTROL
The function allows for two values to be set:

- **OFF** (disabled - factory default)
- **ON** (enabled)

Activation (**EASY CONTROL** = **ON**) is recommended in the event that there is an excessive formation of combustion residues in the flue during operation at reduced power (see FLUE EXHAUST chapter).

Caution! It is advisable to activate the EASY CONTROL function under the supervision of a qualified technician.

To set: *OK > SETTINGS> EASY CONTROL.*

DEPRESSURE NOTICE
It allows you to activate the buzzer for acoustic warnings if the door or the hopper are open.
Please note: Activation can reduce battery life by 30%.
The battery life depends on the usage

To set: *OK > SETTINGS > DEPRESSURE NOTICE*

ADDITIONAL FUNCTIONS

OPTIONAL ADDITIONAL DATA SHEET

The manufacturer has an optional additional data sheet which allows the boiler to have the following additional system management functions. The table below indicates the various possibilities that the optional can offer.
The connection must be made by a qualified technician directly on the data sheet.
Contact the dealer for further details.

DHW Storage Management	✓
Buffer Tank Management	✓
3 heating areas	✓
Instant DHW option	✓
Buffer tank pump or 4th heating area management	✓
Anti-legionella management for DHW storage	✓
DHW storage chrono management	✓
Auxiliary output management and control	✓

TO FIND OUT WHERE YOUR NEAREST SERVICE CENTRE IS, CONTACT YOUR DEALER OR VISIT THE WEBSITE: WWW.LANORDICA-EXTRAFLAME.COM

CLEANING AND MAINTENANCE

ALWAYS FOLLOW THE INSTRUCTIONS IN COMPLETE SAFETY!

- For all operations, except for routine cleaning, make sure that the power cord plug is disconnected as the generator may have been programmed to turn on.
- That the generator is cold all over.
- That the ashes are completely cold.
- Ensure efficient air exchange in the room during the product cleaning operations.
- Poor cleaning will compromise correct operation and safety!

MAINTENANCE

For correct operation, the generator must undergo routine maintenance by a qualified technician, at least once a year.
The periodic inspection and maintenance operations must always be performed by specialised, qualified technicians, who operate in accordance with the laws in force and the instructions given in this use and maintenance manual.

EVERY YEAR, HAVE THE FUME EXTRACTION SYSTEM, FLUE PIPES AND "T" FITTINGS, INCLUDING THE INSPECTION CAPS CLEANED. IF PRESENT, ALSO CLEAN THE ELBOWS AND HORIZONTAL SECTIONS!
THE GENERATOR CLEANING FREQUENCY IS INDICATIVE! IT DEPENDS ON THE QUALITY OF THE PELLET USED AND ON HOW OFTEN IT IS USED.
THESE OPERATIONS MAY SOMETIMES NEED TO BE PERFORMED MORE OFTEN

PERIODIC CLEANING UNDER USER'S RESPONSIBILITY

The periodic cleaning operations, as indicated in this use and maintenance manual, must be performed with the utmost care after reading the instructions, procedures and frequency described in this use and maintenance manual.

CLEANING THE SURFACES AND COVERING

Never use abrasive or chemically aggressive detergents for cleaning!
The surfaces must be cleaned when the generator and coating are completely cold. For the maintenance of the surfaces and metal parts, simply use a cloth dampened with water or water and neutral soap.
Failure to follow the instructions may lead to damage to the generator surfaces and invalidate the warranty.

CLEANING THE CERAMIC GLASS

Never use abrasive or chemically aggressive detergents for cleaning!
The ceramic glass must be cleaned when the glass is completely cold.
To clean the ceramic glass, simply use a dry brush and some damp newspaper dipped in ash. If the glass is very dirty, use a specific cleaning agent for ceramic glass. Spray a small amount on a cloth and use it on the ceramic glass. Do not spray the cleaning agent or any other liquid directly on the glass or seals!
Failure to comply with these instructions may damage the surfaces of the ceramic glass and cause the invalidation of the warranty.

CLEANING THE PELLET HOPPER

When the hopper is completely empty, disconnect the power cord of the generator, remove the residues (dust, chippings, etc.) from the empty hopper and then fill it up.

THE FOLLOWING IMAGES ARE FOR ILLUSTRATIVE PURPOSES.

HEAT EXCHANGER

The heat exchangers must only be cleaned when cold! Its cleaning guarantees constant heat output over time. This maintenance must be performed at least once a day. To do this, use the scrapers positioned in the upper part of the generator, making upward and downward moments several times.

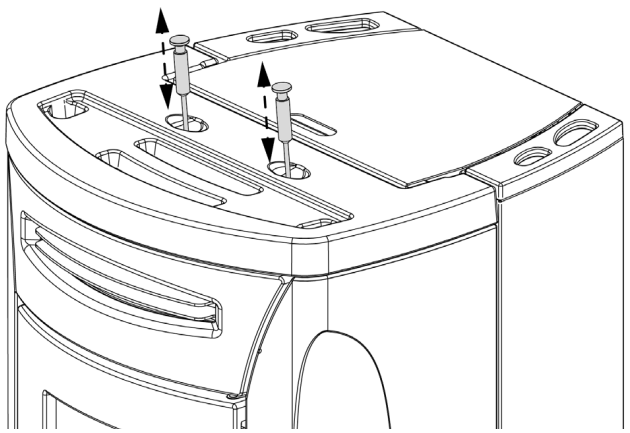

THE IMAGES ARE FOR ILLUSTRATIVE PURPOSES.

COMBUSTION CHAMBER

By means of a mechanical system, the burn pot is cleaned automatically at preset intervals.
It is however advisable to remove any residues by using a vacuum cleaner.

- Suck the ash deposited between the partition and the fire holder (1).
- Remove the ash conveyor by lifting it at the back (A).
- Clean the combustion chamber and the bottom of the burn pot completely, using a suitable vacuum cleaner.
- Refit the ash conveyor by performing the same operation in reverse.

Always make sure that:
- that the ash conveyor rests on the burn pot correctly, and not on another area of the combustion chamber.
- the ash conveyor is installed in the correct direction for pellet feed.
- the ash conveyor has been pushed towards the rear wall of the hearth (B)

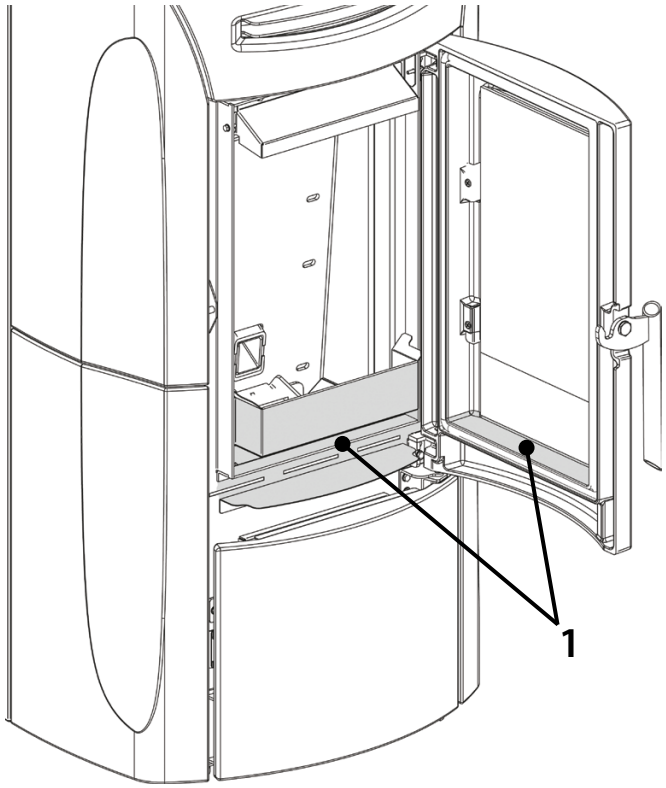

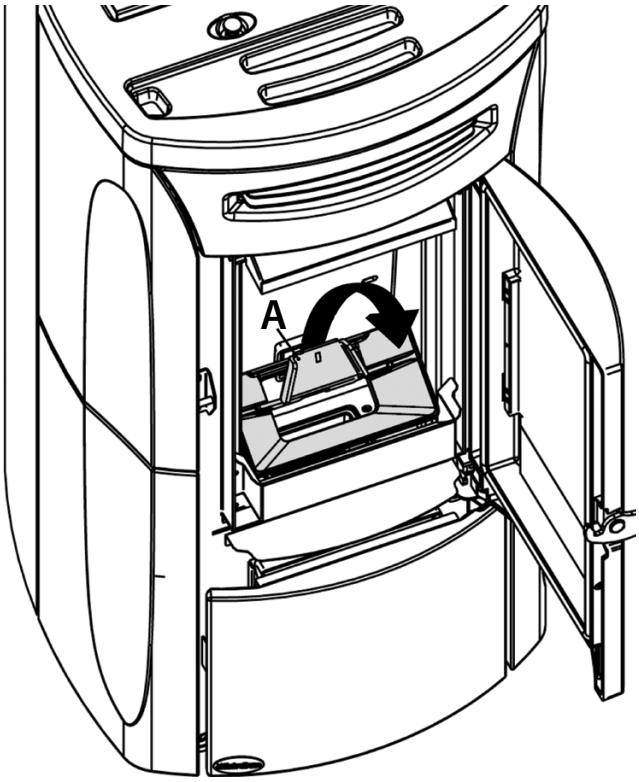

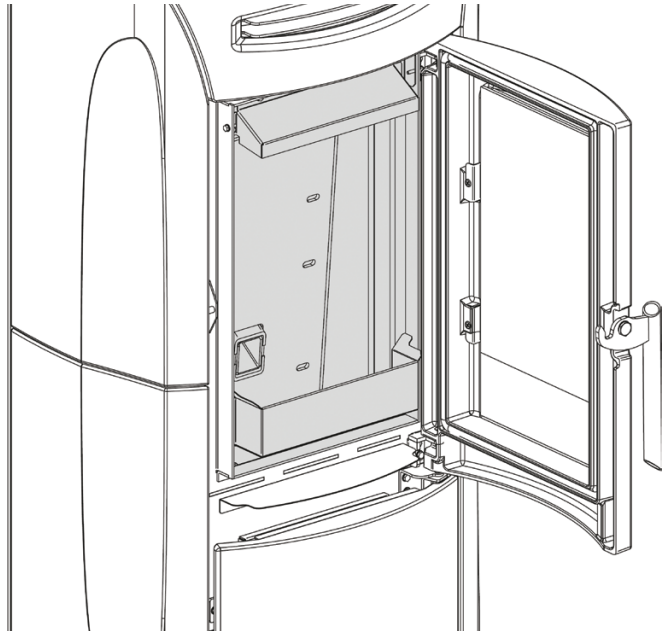

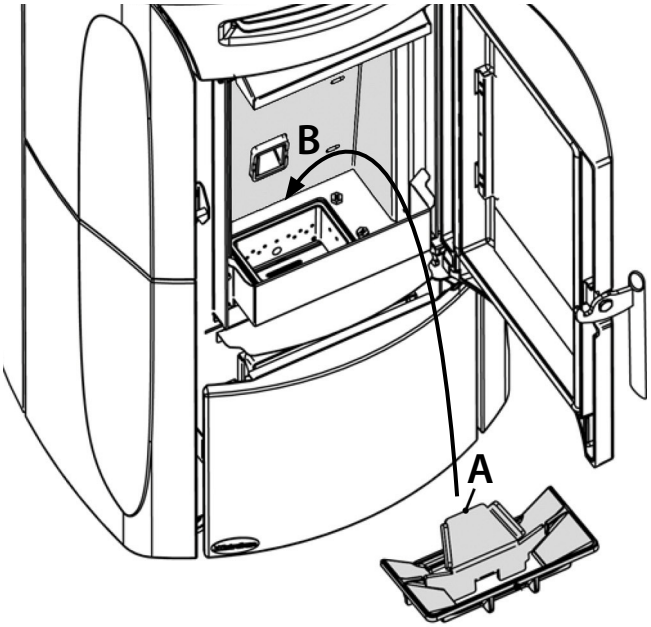

THE IMAGES ARE FOR ILLUSTRATIVE PURPOSES.

A CLEAN BURN POT GUARANTEES CORRECT OPERATION!
BY KEEPING THE BURN POT AND ITS HOLES CONSTANTLY CLEAN AND FREE OF COMBUSTION RESIDUE, EXCELLENT COMBUSTION IS GUARANTEED OVER TIME, THUS PREVENTING ANY GENERATOR MALFUNCTIONS THAT MAY REQUIRE TECHNICAL ASSISTANCE.
THE "EASY SETUP" FUNCTION IN THE USER MENU CAN BE USED TO ADAPT COMBUSTION ACCORDING TO THE NEEDS DESCRIBED.

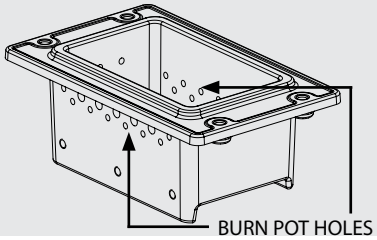

ASH DRAWER:

- Remove the ash drawer and empty it into a suitable container.

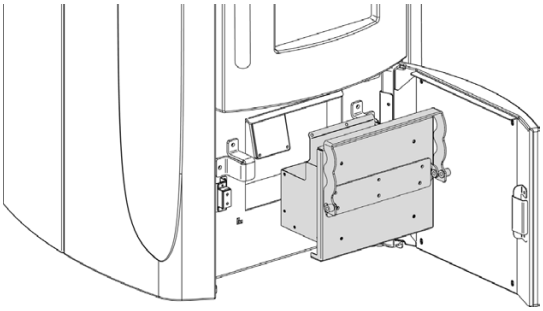

PARTS/FREQUENCY	EVERY DAY	EVERY 7 DAYS	EVERY 15 DAYS	EVERY YEAR
HEAT EXCHANGER (USER)	X			
COMBUSTION CHAMBER (USER)		X		
ASH DRAWER (USER)			X	
T-SHAPED FITTING / SMOKE DUCT (TECHNICIAN)				X

One day means an average use of 8h at the rated power.
How often the ash drawer is emptied depends on a number of factors: the type of pellets, the stove output, the use of the stove and the type of installation.

IF THE POWER CORD IS DAMAGED, IT MUST BE REPLACED BY THE SERVICE CENTRE OR BY A SIMILARLY QUALIFIED PERSON, SO AS TO AVOID ALL RISKS.

ROUTINE MAINTENANCE PERFORMED BY QUALIFIED TECHNICIANS

Routine maintenance must be performed at least once a year.
Given that the generator uses pellets as solid fuel, it requires annual routine maintenance, which must be performed by a **Qualified technician, using only original spare parts.**
Failure to comply may jeopardise the safety of the appliance and invalidate the warranty conditions.
By observing the cleaning schedule reserved to the user described in the use and maintenance manual, the generator will be guaranteed correct combustion over time, thus preventing any faults and/or malfunctions which may require subsequent technical assistance. Requests for routine maintenance are not covered by the warranty.

GASKETS: PELLET HOPPER LID, DOOR, ASH DRAWER AND BURN POT
The gaskets ensure the proper sealing of the stove and therefore its proper operation.
They must be periodically checked and immediately replaced if worn or damaged.
These operations must be carried out by a qualified technician.

CONNECTION TO THE FLUE
Annually, or in any case each time the flue pipe needs to be vacuumed and cleaned. If there are horizontal sections, the residue must be removed to prevent it from obstructing the flow of fumes.

SHUT-DOWN (END OF SEASON)

At the end of each season, before turning the stove off, it is advisable to completely empty the pellet hopper, removing any pellet residue and dust with a vacuum cleaner.
IT IS ADVISABLE NOT TO DISCONNECT THE GENERATOR FROM THE POWER SUPPLY TO ALLOW THE PUMP TO CARRY OUT THE NORMAL ANTI-BLOCK CYCLES.
Routine maintenance must be performed at least once a year.

THE IMAGES ARE FOR ILLUSTRATIVE PURPOSES.

TO FIND OUT WHERE YOUR NEAREST SERVICE CENTRE IS, CONTACT YOUR DEALER OR VISIT THE WEBSITE: WWW.LANORDICA-EXTRAFLAME.COM

THE IMAGES ARE FOR ILLUSTRATIVE PURPOSES.

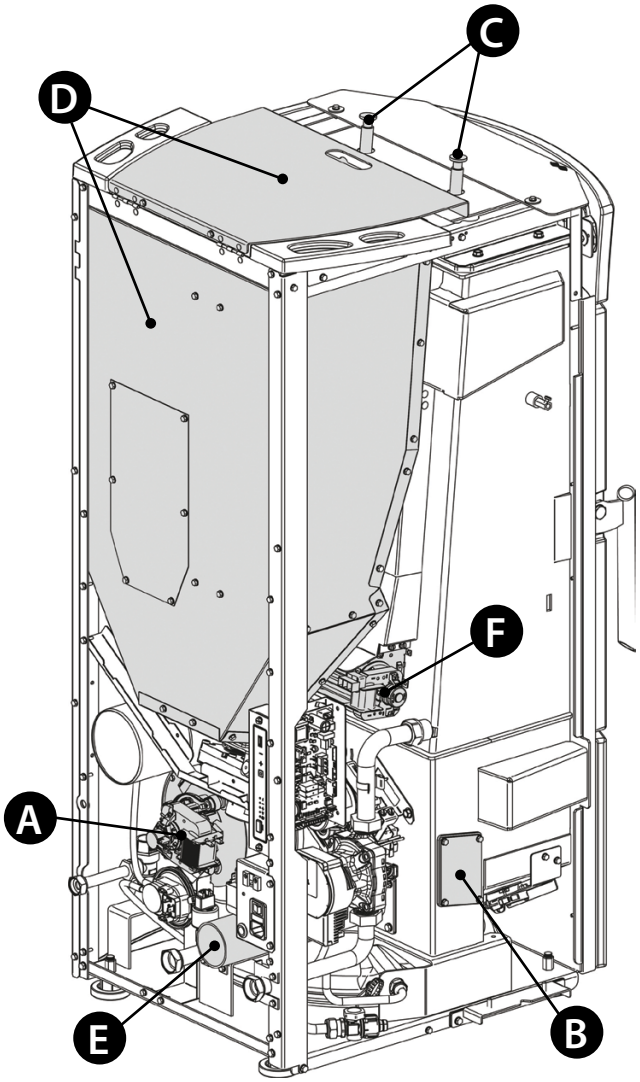

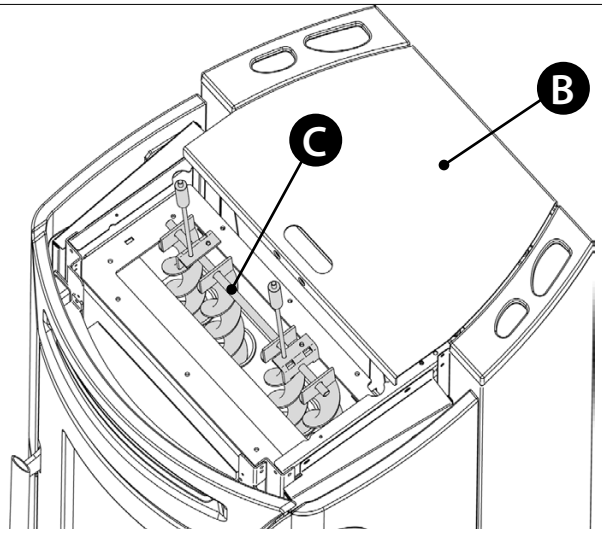

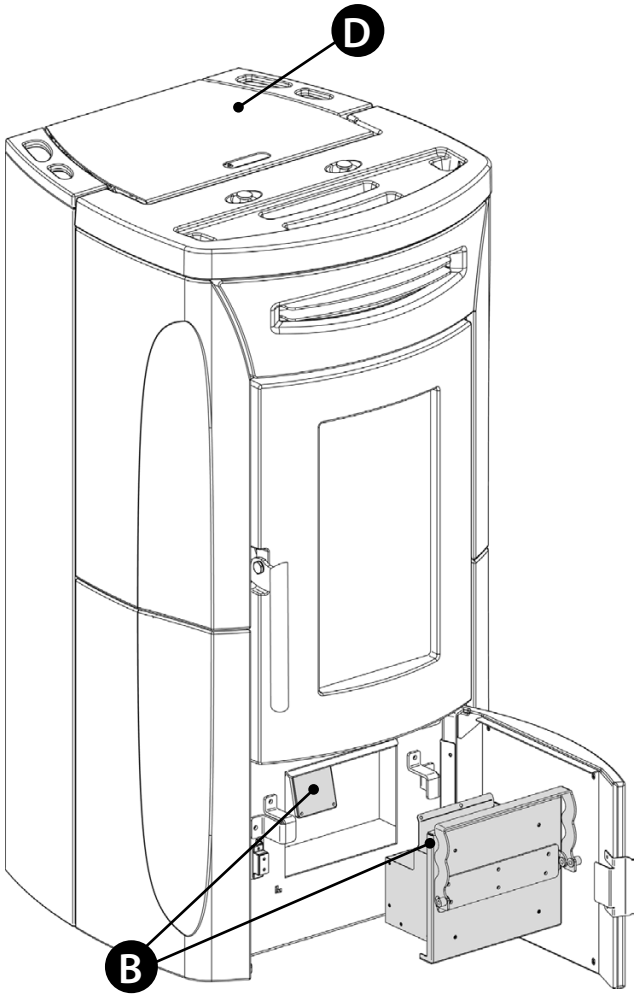

A	Fumes motor (disassembly and cleaning and fumes pipe and "T"), new silicone in the provided points
B	Gaskets, pellet hopper, inspections, ash drawer and door (replace and apply silicone where indicated)
C	Combustion chamber and heat exchanger (full cleaning) including ignition plug pipe
D	Hopper (complete emptying and cleaning).
E	Check air intake pipe and cleaning of the flow sensor
F	Remove the room air fan and remove any dust and pellet residue.

DISPLAYS	
DISPLAY	**REASON**
OFF	Generator off
START	The start-up phase is in progress
PELLET LOADING	Continuous pellet feeding is in progress during the ignition phase
IGNITION	The ignition phase is in progress
PREPARATION	The preparation phase is in progress
WORK	The normal work phase is in progress
MODULATION	The generator is working at minimum
BURN POT CLEANING	Automatic burn pot cleaning is in progress
FINAL CLEANING	The final cleaning is in progress
STAND BY	Generator off waiting for re-ignition due to an external thermostat
COOLING STAND BY	A new ignition is attempted when the generator has just been switched off. When the generator switches off, one must wait for the complete shutdown of the fumes motor, then clean the burn pot. The generator can only be re-ignited when these operations have been performed.
H-OFF	Generator off due to water temperature over set.
CLOSE HOPPER-STOVE DOOR	This indication means that you have 60 seconds to close the hatch/door and the pellet lid. After 60 seconds have passed, the stove will enter "DEPR ALARM" during the ignition phase, while during normal operation, the stove will enter "COOLING STAND BY" and then restart automatically when the conditions are met (cold stove, etc.).
***T - OFF**	Generator off waiting for re-ignition due to all requests met
BLACK OUT STAND BY	The generator is cooling after a power cut. Once cooling is completed, it will re-start automatically
ANTI-FREEZING	The anti-freezing function is in progress as the H2O temperature is below the factory set threshold the pump is active until the water reaches the pre-set factory parameter +2°C
ANTI-BLOCK	The pump anti-block function is in progress (only if the generator has been in an OFF state for at least 96 hours); the pump is activated for the time pre-set by the manufacturer, in order to prevent it from blocking
AUTO BLOW	The automatic blow is active

ALARMS		
DISPLAY	**EXPLANATION**	**SOLUTION**
⚠	Indicates the presence of an alarm.	On: indicates the presence of an alarm Flashing: indicates the deactivation of the depression sensor. The alarm can be reset only if the fumes motor has stopped and 15 minutes have passed since the alarm was displayed, by pressing the key 1/ ⏻ for 3 seconds.
FUMES MOTOR FAULT	Fumes motor fault	Contact after-sales centre
FUMES PROBE	Fumes probe fault.	Contact after-sales centre

* if there is an additional system data-sheet

TO FIND OUT WHICH IS YOUR NEAREST AFTER-SALES CENTRE, CONTACT YOUR DEALER OR VISIT THE WEBSITE WWW.LANORDICA-EXTRAFLAME.COM

HOT FUMES	High fumes temperature	Check pellet feed (see "Pellet feed adjustment"). If the problem cannot be solved, contact an authorised technician.
NO IGNITION	The pellet hopper is empty. Pellet feed calibration inadequate. Thermostat bulbs tripped.	Check for the presence of pellets in the hopper. Adjust the pellet flow (see "Pellet load adjustment"). Check the procedures described in the "Ignition" chapter. Check bulb thermostats (see chapter on Resetting)
BLACK OUT NO IGNITION	No current during the ignition phase.	Turn the stove OFF using key 1 and repeat the procedure described in the "Ignition" chapter.
NO FLAME	The pellet hopper is empty. No pellet feed. The gearmotor does not feed pellets.	Check for the presence of pellets in the hopper. Adjust the pellet flow (see "Pellet feed adjustment").
DEPR ALARM	The door is not closed correctly. The ash drawer is not closed correctly. The combustion chamber is dirty. The fumes exhaust pipe is blocked/dirty	Check hermetic door closure. Check hermetic closure of the ash drawer. Check cleanliness of the fumes pipe and the combustion chamber.
H2O OVERTEMP	Air in the system Inadequate circulation	Possible air in the system; bleed the system. Lack of adequate circulation. Lack of or inadequate safety zone. The water in the stove has exceeded 95°C. Possible pump anomaly. If the problem persists, restore operations must be performed by an authorised technician.
*** TRAPDOOR BLOCKED**	The automatic cleaning of the burn pot is blocked. Burn pot dirty/clogged The door is not closed correctly.	Check that the door closes correctly. Check that the burn pot is clear and clean. The automatic cleaning of the burn pot is blocked. If the problem persists, contact the service centre.
MIN H2O PRESSURE ALARM	The system pressure read by the pressure switch is too low.	Possible air in the system; bleed the system. Possible lack of water or leaks due to anomalies in some system component. If the problem persists, contact the service centre.
H2O PROBE	H2O probe fault	Contact after-sales centre
MAX H2O PRESSURE ALARM	The pressure of the water has exceeded the max threshold	Possible air in the system; bleed the system. Check that the expansion vessels are not damaged or under-dimensioned Check that the cold system is loaded at the correct pressure If the problem persists, contact the service centre.
*** AUGER CONTROL ALARM**	Abnormal pellet feeding.	Contact after-sales centre
*** AUGER BLOCKED**	Abnormal operation of pellet motor.	Contact after-sales centre
*** DHW PROBE**	Fault in DHW tank.	Contact after-sales centre
*** BUFFER TANK PROBE**	Fault in Buffer tank probe.	Contact after-sales centre
MAX ELECTRICAL CURRENT	The automatic cleaning of the burn pot is blocked. Burn pot dirty/clogged The door is not closed correctly.	Check that the door closes correctly. Check that the burn pot is clear and clean. The automatic cleaning of the burn pot is blocked. If the problem persists, contact the service centre.
PWM INTERFACE ALARM	IPWM output interface damaged, in short circuit or not connected	Contact after-sales centre
HOT PWM ALARM	The pump is operating but not with good performance. Undervoltage 160-194v. Pump in circuit breaker protection mode.	Contact after-sales centre
STOPPED PWM ALARM	The pump has stopped but is still operational. Undervoltage < 160v. Overvoltage. Unexpected external flow.	Contact after-sales centre
STOPPED 2 PWM ALARM	The pump has stopped but is still operational. Problem in a component different to the pump. Debris in installation. Positioning in high temperature.	Contact after-sales centre
BLOCKED PWM ALARM	The pump has stopped permanently Pump blocked. Electronic module damaged	Contact after-sales centre
FLOW PWM ALARM	Pump blocked. Liquid with high density. Pipe obstructed.	Contact after-sales centre

* if there is an additional system data-sheet

TO FIND OUT WHICH IS YOUR NEAREST AFTER-SALES CENTRE, CONTACT YOUR DEALER OR VISIT THE WEBSITE WWW.LANORDICA-EXTRAFLAME.COM

DISPOSAL

INFORMATION FOR MANAGEMENT OF ELECTRIC AND ELECTRONIC APPLIANCE WASTE CONTAINING BATTERIES OR ACCUMULATORS

This symbol, which is used on the product, batteries, accumulators or on the packaging or documents, means that at the end of its useful life, this product, the batteries and the accumulators included must not be collected, recycled or disposed of together with domestic waste.
Improper management of electric or electronic waste or batteries or accumulators can lead to the leakage of hazardous substances contained in the product. For the purpose of preventing damage to health or the environment, users are kindly asked to separate this equipment and/or batteries or accumulators included from other types of waste and to arrange for disposal by the municipal waste service It is possible to ask your local dealer to collect the waste electric or electronic appliance under the conditions and following the methods provided by national laws transposing the Directive 2012/19/EU.

Separate waste collection and recycling of unused electric and electronic equipment, batteries and accumulators helps to save natural resources and to guarantee that this waste is processed in a manner that is safe for health and the environment.
For more information about how to collect electric and electronic equipment and appliances, batteries and accumulators, please contact your local Council or Public Authority competent to issue the relevant permits.

Extraflame®

Riscaldamento a Pellet

EXTRAFLAME S.p.A. Via Dell'Artigianato, 12 36030 - MONTECCHIO PRECALCINO (VI) - ITALY
☏ +39.0445.865911 - 🖷 +39.0445.865912 - ✉ info@extraflame.it - 💻 www.lanordica-extraflame.com

MADE IN ITALY
design & production

TO FIND THE SERVICE CENTRE NEAREST TO YOU CONTACT YOUR DEALER OR CONSULT THE SITE WWW.LANORDICA-EXTRAFLAME.COM

The manufacturer reserves the right to vary the characteristics and the data reported in this pamphlet at any moment and without notice, in order to improve its products.