Extraflame®

Riscaldamento a Pellet

UK

PELLET STOVES USER MANUAL

DAHIANA VFS - DAHIANA PLUS VFS

MADE IN ITALY
design & production

004281021 - Rev 000

APPLY TECHNICAL
DATA LABEL

⚠ ATTENTION

SURFACES CAN BECOME VERY HOT!
ALWAYS USE PROTECTIVE GLOVES!

During combustion, thermal energy is released that significantly increases the heat of surfaces, doors, handles, controls, glass, exhaust pipes, and even the front of the appliance. Avoid contact with those elements if not wearing protective clothing (protective gloves included). Make sure children are aware of the danger and keep them away from the stove during operation.

ENGLISH 4

WARNINGS 4
SAFETY 4
ROUTINE MAINTENANCE 6
INSTALLATION 7
DAHIANA VFS DETAILS 9
DAHIANA PLUS VFS DETAILS 10
CHANGING THE ROOM AIR POSITION 11
HOT AIR DUCTING (DAHIANA PLUS VFS) 12
ADDITIONAL THERMOSTAT TO CONTROL THE DUCT MOTOR 12
OPERATION IN AIR DUCTING WITH THERMOSTAT OR PROBE (OPTIONAL) 13
STOVE POSITIONING 14
NOTE FOR CORRECT OPERATION 14
BULB THERMOSTAT REACTIVATION 14
FUSE 14
PELLETS AND LOADING 15
PELLET HOPPER - PRESSURISED CLOSURE. 15
CONTROL BOARD 16
ICON KEY 16
GENERAL MENU 17
GENERAL WARNINGS 17
FIRST IGNITION SETTINGS 18
DATE-TIME 18
LANGUAGE 18
DEGREES 18
OPERATION AND LOGIC 19
FRONT AIR 20
AIR DUCTING (DAHIANA PLUS VFS ONLY) 20
AIR ZONE CONTROL (DAHIANA PLUS VFS ONLY) 20
EASY SETUP 20
CHRONO 21
ENABLING/DISABLING THE CHRONO 21
SETTINGS 23
DISPLAY 23
STAND BY 23
OPERATION WITH ADDITIONAL THERMOSTAT (OPTIONAL) 23
ADDITIONAL THERMOSTAT 24
ADDITIONAL THERMOSTAT INSTALLATION 24
DELTA-T 24
FIRST LOAD 24
RESET 24
EASY CONTROL 25
ADDITIONAL FUNCTIONS 25
DELAYED SWITCH-OFF 25
KEYS LOCKED 25
CLEANING AND MAINTENANCE 26
MAINTENANCE 26
PERIODIC CLEANING UNDER USER'S RESPONSIBILITY 26
ROUTINE MAINTENANCE PERFORMED BY QUALIFIED TECHNICIANS 29
SHUT-DOWN (END OF SEASON) 29
DISPLAYS 32
ALARMS 32
DISPOSAL 33

We thank you for having chosen our company; our product is a great heating solution developed from the most advanced technology with top quality machining and modern design, aimed at making you enjoy the fantastic sensation that the heat of a flame gives, in complete safety.

WARNINGS

This instructions manual is an integral part of the product: make sure that it always accompanies the appliance, even if transferred to another owner or user, or if transferred to another place. If it is damaged or lost, request another copy from the area technician. This product is intended for the use for which it has been expressly designed. The manufacturer is exempt from any liability, contractual and extracontractual, for injury/damage caused to persons/animals and objects, due to installation, adjustment and maintenance errors and improper use.
Installation must be performed by qualified staff, which assumes complete responsibility for the definitive installation and consequent good functioning of the product installed. One must also bear in mind all laws and national, regional, provincial and town council Standards present in the country in which the appliance has been installed, as well as the instructions contained in this manual.
The use of the appliance must comply with all local, regional, national and European regulations.
The Manufacturer cannot be held responsible for the failure to comply with such precautions.
After removing the packaging, ensure that the content is intact and complete. Otherwise, contact the dealer where the appliance was purchased.
All electric components that make up the product must be replaced with original spare parts exclusively by an authorised after-sales centre, thus guaranteeing correct functioning.

SAFETY

- **THE APPLIANCE MAY BE USED BY CHILDREN 8 YEARS OF AGE OR OLDER AND INDIVIDUALS WITH REDUCED PHYSICAL, SENSORY, OR MENTAL CAPACITIES OR WITHOUT EXPERIENCE OR THE NECESSARY KNOWLEDGE, PROVIDED THAT THEY ARE SUPERVISED OR HAVE**

RECEIVED INSTRUCTIONS ON SAFE USE OF THE APPLIANCE AND THAT THEY UNDERSTAND THE INHERENT DANGERS.

- THE GENERATOR MUST NOT BE USED BY PERSONS (INCLUDING CHILDREN) WITH REDUCED PHYSICAL, SENSORY AND MENTAL CAPACITIES OR WHO ARE UNSKILLED PERSONS, UNLESS THEY ARE SUPERVISED AND TRAINED REGARDING USE OF THE APPLIANCE BY A PERSON RESPONSIBLE FOR THEIR SAFETY.
- THE CLEANING AND MAINTENANCE REQUIRED BY THE USER MUST NOT BE PERFORMED BY CHILDREN WITHOUT SUPERVISION.
- CHILDREN MUST BE CHECKED TO ENSURE THAT THEY DO NOT PLAY WITH THE APPLIANCE.
- DO NOT TOUCH THE GENERATOR WHEN YOU ARE BAREFOOT OR WHEN PARTS OF THE BODY ARE WET OR DAMP.
- IT IS FORBIDDEN TO MODIFY THE APPLIANCE IN ANY WAY.
- DO NOT PULL, REMOVE, TWIST THE ELECTRICAL CABLES COMING OUT OF THE PRODUCT EVEN IF IT IS DISCONNECTED FROM THE MAINS.
- IT IS ADVISED TO POSITION THE POWER SUPPLY CABLE SO THAT IT DOES NOT COME INTO CONTACT WITH HOT PARTS OF THE APPLIANCE.
- THE POWER SUPPLY PLUG MUST BE ACCESSIBLE AFTER INSTALLATION.
- DO NOT CLOSE OR REDUCE THE DIMENSIONS OF THE AIRING VENTS IN THE PLACE OF INSTALLATION. THE AIRING VENTS ARE ESSENTIAL FOR CORRECT COMBUSTION.
- DO NOT LEAVE THE PACKAGING ELEMENTS WITHIN REACH OF CHILDREN OR UNASSISTED DISABLED PERSONS.
- THE HEARTH DOOR MUST ALWAYS BE CLOSED DURING NORMAL FUNCTIONING OF THE PRODUCT.
- WHEN THE APPLIANCE IS FUNCTIONING AND HOT TO THE TOUCH, ESPECIALLY ALL EXTERNAL SURFACES, ATTENTION MUST BE PAID
- CHECK FOR THE PRESENCE OF ANY OBSTRUCTIONS BEFORE SWITCHING THE APPLIANCE ON FOLLOWING A PROLONGED PERIOD OF INACTIVITY.
- THE GENERATOR HAS BEEN DESIGNED TO ADJUST ITSELF AUTOMATICALLY IN PARTICULAR OPERATING CONDITIONS
- THE GENERATOR HAS BEEN DESIGNED TO FUNCTION IN ANY CLIMATIC CONDITION. IN PARTICULARLY ADVERSE CONDITIONS

(STRONG WIND, FREEZING) SAFETY SYSTEMS MAY INTERVENE THAT SWITCH THE GENERATOR OFF. IF THIS OCCURS, CONTACT THE TECHNICAL AFTER-SALES SERVICE AND ALWAYS DISABLE THE SAFETY SYSTEMS.

- **IN THE EVENT THE FLUE CATCHES FIRE, USE SUITABLE SYSTEMS FOR SUFFOCATING THE FLAMES OR REQUEST HELP FROM THE FIRE BRIGADE.**
- **THIS APPLIANCE MUST NOT BE USED TO BURN WASTE**
- **DO NOT USE ANY FLAMMABLE LIQUIDS FOR IGNITION**
- **DURING THE FILLING PHASE DO NOT PUT THE BAG OF PELLETS TO INTO CONTACT WITH THE PRODUCT**
- **THE MAJOLICAS ARE TOP QUALITY ARTISAN PRODUCTS AND AS SUCH CAN HAVE MICRO-DOTS, CRACKLES AND CHROMATIC IMPERFECTIONS. THESE FEATURES HIGHLIGHT THEIR VALUABLE NATURE. DUE TO THEIR DIFFERENT DILATION COEFFICIENT, THEY PRODUCE CRACKLING, WHICH DEMONSTRATE THEIR EFFECTIVE AUTHENTICITY. TO CLEAN THE MAJOLICAS, IT IS RECOMMENDED TO USE A SOFT, DRY CLOTH. IF A DETERGENT OR LIQUID IS USED, THE LATTER COULD PENETRATE INSIDE THE CRACKLES, HIGHLIGHTING THEM.**
- **SINCE THE PRODUCT CAN TURN ON AUTOMATICALLY THANKS TO THE TIMER, OR REMOTELY USING THE DEDICATED APPLICATIONS, IT IS STRICTLY FORBIDDEN TO LEAVE ANY COMBUSTIBLE OBJECT WITHIN THE SAFETY DISTANCES INDICATED ON THE TECHNICAL DATA PLATE.**
- **INTERNAL COMBUSTION CHAMBER PARTS CAN BE SUBJECT TO EXTETICAL WARN, IT DOESN'T AFFECT THE FUNCTIONALITY**

ROUTINE MAINTENANCE

Based on Decree 22 January 2008 n°37 art.2, routine maintenance means interventions aimed at reducing degradation due to normal use, as well as dealing with accidental events entailing the need of first interventions, which however do not modify the structure of the system upon which one is intervening or its intended use according to the requirements laid down by the technical standards in force and by the manufacturer's use and maintenance manual.

INSTALLATION

GENERAL

The flue gas exhaust and hydraulic connections must be carried out by qualified personnel who must issue installation conformity documentation compliant with national standards.
The installer must provide the owner or person acting for him, according to the legislation in force, with the declaration of conformity, supplied with:

1) the use and maintenance manual of the appliance and of the system components (such as for example, the smoke ducts, chimney, etc.);
2) photocopy or photograph of the chimney plaque;
3) system booklet (where applicable).

The installer must ask to be issued with a receipt stating that the documentation has been provided, and must keep it with a copy of the technical documentation relating to the installation.
For installation in a condominium, prior approval from the condominium's administrator must be requested.
Where required, check the exhaust gas emissions after installation. Should a sampling point be installed, it must be airtight.

COMPATIBILITY

Do not install in rooms with a fire hazard. It is also forbidden to install it in living areas with the following characteristics:

1. where there are liquid fuel appliances with continuous or discontinuous operation that draw the combustion air into the room in which they are installed.
2. where there are type B gas appliances intended for heating, with or without domestic hot water production and in adjacent and communicating rooms.
3. where the depression measured in situ between the external and internal environment is greater than 4 Pa.

N.B.: Watertight appliances can also be installed in the cases indicated in points 1, 2 and 3 of this paragraph.

INSTALLATIONS IN BATHROOMS, BEDROOMS AND STUDIO FLATS

Installation in bathrooms, bedrooms and studio flats is only allowed for sealed or closed hearth appliances with ducted combustion air taken from the outside.

POSITIONING AND SAFETY DISTANCES

The support surfaces and/or points must have a suitable capacity to bear the overall weight of the appliance, accessories and coverings. If the floor is made of a combustible material, we recommend using a non-combustible material to protect the front part from any burnt material which might fall during routine cleaning operations. The generator must be level to function properly. The side walls, the rear walls and the floor support surface should be made of non-combustible material.

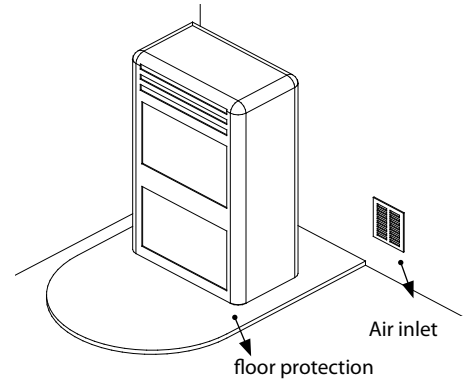

One must also bear in mind all laws and national, regional, provincial and town council regulations in force in the country in which the appliance has been installed, as well as the instructions contained in this manual.

MINIMUM DISTANCES (PELLET STOVES)

Installation next to flammable or heat-sensitive materials is permitted **only if the special safety distances specified on the label at the beginning of the manual (pag.2) are observed**. If the materials are not flammable, you must keep a side and rear distance of at least 100 mm (without the inserts). For products equipped with rear spacers, wall-mounting installation is permitted exclusively for the rear side.

PREPARATIONS FOR MAINTENANCE

To carry out extraordinary maintenance operations on the product, it may be necessary to move it away from the adjacent walls. This must be done by a technician authorised to disconnect the combustion product evacuation ducts and then reconnect them. For heaters connected to the hydraulic system, the connection between the system itself and the product must be made in such a way that, when an authorised technician is about to carry out extraordinary maintenance operations, it is possible to move the heater at least 1 metre away from the adjacent walls.

INSTALLING INSERTS

When installing inserts, access must be prevented to the internal parts of the appliance and it must not be possible to access live parts during extraction operations.
Any wiring, for example the power cable or room probe, must be positioned so as not to be damaged during movement of the insert and must not come into contact with hot parts. If a cavity made of combustible material is installed, we recommend taking all the safety precautions indicated by the installation standards.

VENTILATION AND AERATION OF INSTALLATION ROOMS

In case of non-airtight heater and/or installation, the ventilation must respect the minimum area indicated below (considering the highest value among those provided):

Appliance categories	Reference standard	Percentage of the net opening section with respect to the appliance fumes outlet section	Minimum net opening value of the ventilation duct
Pellet stoves	UNI EN 14785	-	80 cm²
Boilers	UNI EN 303-5	50%	100 cm²

Under any condition, including in the presence of extractor hoods and/or of controlled forced ventilation systems, the pressure difference between the generator installation rooms and the outside must always be equal to or less than 4 Pa.

In the presence of type B gas appliances with intermittent operation not intended for heating, they must have their own aeration and/or ventilation opening.

The air inlets must meet the following requirements:
- they must be protected with grids, metal mesh, etc., but without reducing the net useful section;
- they must be made so as to make the maintenance operations possible;
- positioned so that they cannot be obstructed;

The clean and non-contaminated air flow can also be obtained from a room adjacent to that of installation (indirect aeration and ventilation), as long as the flow takes place freely through permanent openings communicating with the outside.
The adjacent room cannot be used as a garage, or to store combustible material or for any other activity with a fire hazard, bathroom, bedroom or common room of the building.

FLUE GAS EXHAUST
The heat generator works in depression and is equipped with an outlet fan for flue gas extraction. There must be a single exhaust system for the generator. Using a flue that is shared with other devices is not allowed.
The components of the flue gas exhaust system must be chosen in relation to the type of appliance to be installed in compliance with:
- UNI/ TS 11278 in the event of metal chimneys, with particular attention to that stated in the specification;
- UNI EN 13063-1 and UNI EN 13063-2, UNI EN 1457, UNI EN 1806 in the event of non-metallic chimneys.
- The length of the horizontal section must be minimal and, in any case, no longer than 3 metres, with a minimum upward slope of 3%
- There must not be more than 4 direction changes including the one due to the use of the "T" element.
- A "T" fitting with a condensation collection cap must be provided at the base of the vertical section.
- If the exhaust is not inserted in an existing flue, a vertical section with a windproof end piece is required (UNI 10683).
- The vertical duct can be inside or outside the building. If the smoke duct is inserted in an existing flue, it must be certified for solid fuel.
- If the smoke duct is outside the building, it must always be insulated.
- The smoke ducts must have at least one airtight inlet for flue gas sampling.
- All the sections of the flue gas duct must be accessible to inspection.
- Inspection openings must be provided for cleaning.
- If the generator has a fume temperature lower than 160°C+ ambient temperature caused by the high yield (contact technicians) it MUST be resistant to humidity.
- A flue system that does not respect the previous points or, in general, that does not comply with the regulations, may cause condensation phenomena inside it.

CHIMNEY CAP
The chimney caps must meet the following requirements:
- they must have a useful outlet section no less than double that of the chimney/ducted system on which it is installed;
- they must be adapted in order to prevent the penetration of rain and snow in the chimney/ducted system;
- they must be built so that, in the event of winds coming from all directions and from any angle, the expulsion of combustion products is in any case ensured;

FOR GERMANY ONLY
The product can be connected to a shared flue (multi-connection) provided that the requirements of the regional and national regulations, amongst which DIN EN 13384-2, DIN V 18160-1, DIN 18896 and of the MFeuV-2007 (Muster-Feuerungsverordnung) are strictly complied with, and that the local chimney sweep has checked and approved the installation conditions.
Please also remember the following indications, which the end user must comply with:
- The device can be operated only with the doors closed.
- The doors and all setting devices must remain closed when the device is not on (except for cleaning and maintenance operations).

EXAMPLES OF CORRECT CONNECTION TO THE CHIMNEY

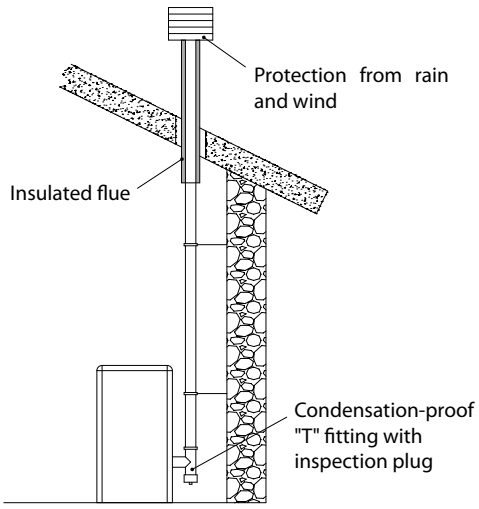

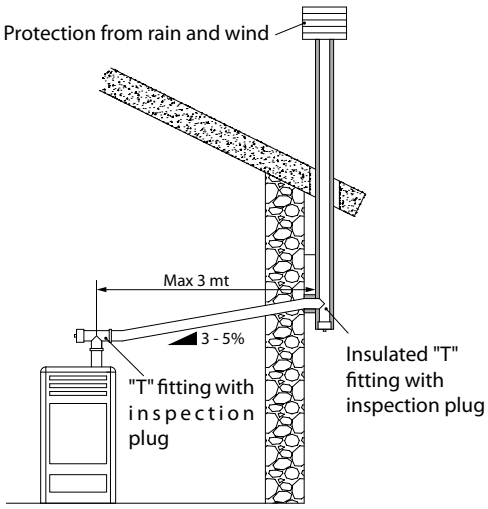

CONNECTION TO THE MAINS ELECTRIC SUPPLY
The generator is supplied with an electric power cable to be plugged into a 230V 50 Hz socket, possibly with a circuit breaker switch. The socket must be easily accessible.
The electrical system must be compliant with standards. The efficiency of the earthing circuit must be checked. Unsuitable earthing of the system can cause malfunctioning for which the manufacturer will not be held liable.
Power supply variations beyond 10% can cause faulty operation of the product.

DAHIANA VFS DETAILS

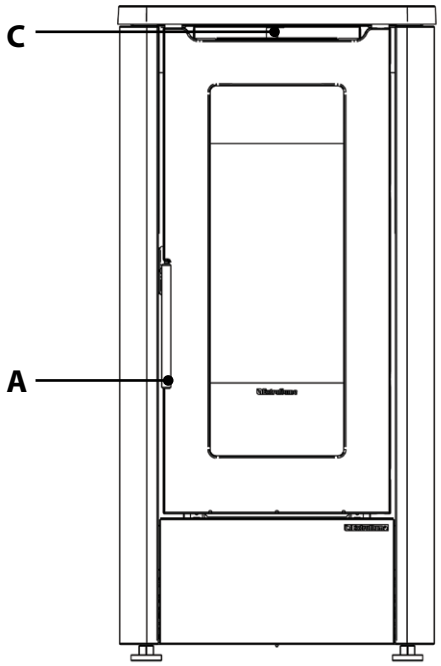

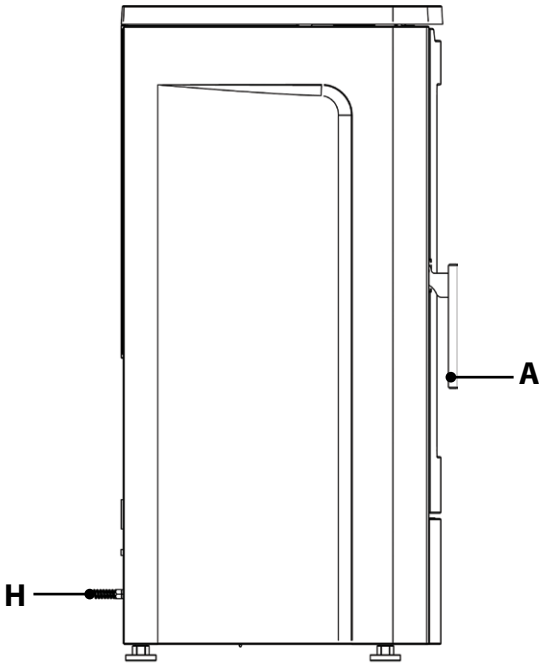

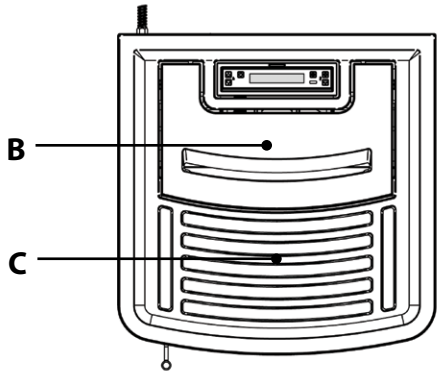

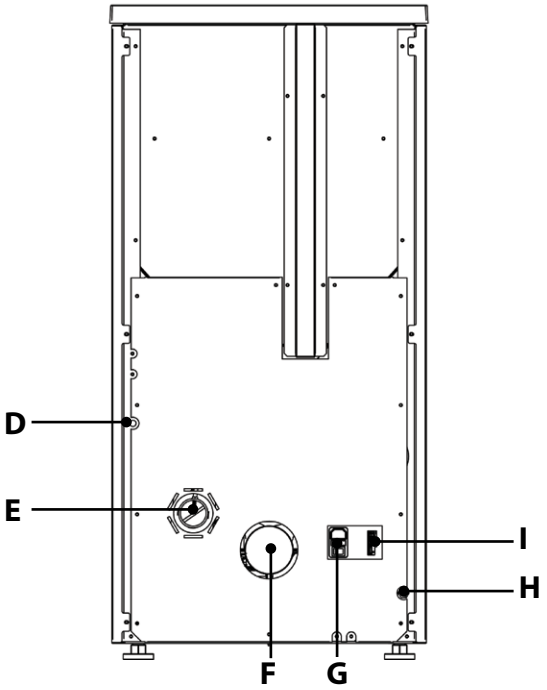

A	Access to combustion chamber and ash drawer	**D**	Bulb thermostat reactivation	**G**	On/Off Fuse 230V power supply
B	Pellet hopper	**E**	Combustion air inlet	**H**	Ambient probe
C	Ambient air outlet	**F**	Rear fumes exhaust	**I**	Additional thermostat input

DAHIANA PLUS VFS DETAILS

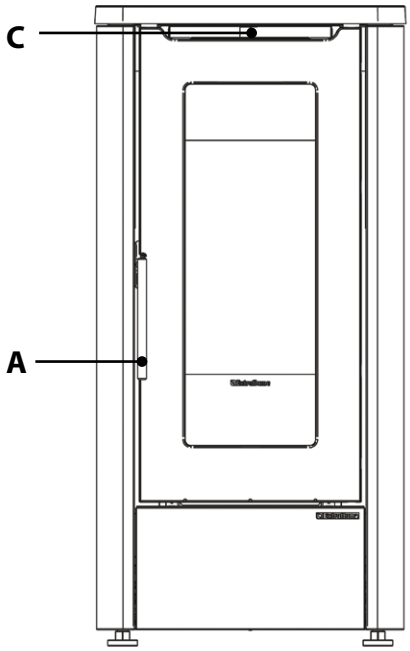

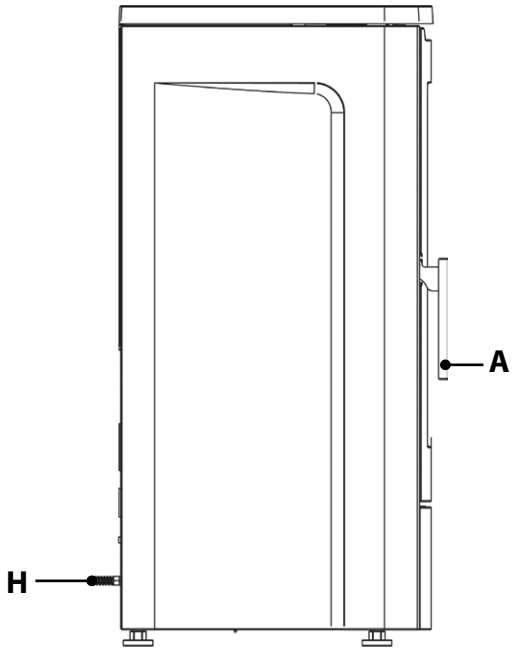

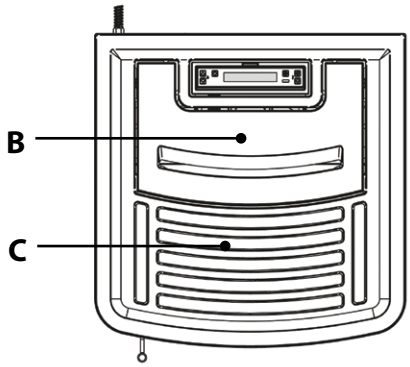

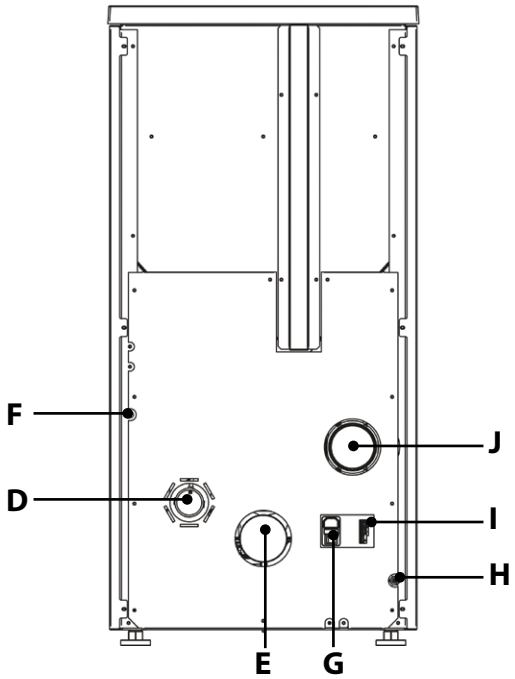

A	Access to combustion chamber and ash drawer	**D**	Combustion air inlet	**H**	Ambient probe
B	Pellet hopper	**E**	Rear fumes exhaust	**I**	Additional thermostat input Ducting additional thermostat input
		F	Bulb thermostat reactivation		
C	Ambient air outlet	**G**	On/Off Fuse 230V power supply	**J**	Ducting outlet

CHANGING THE ROOM AIR POSITION

The appliance has the room air positioned at the "front" by default.
For upper ventilation, request the assistance of a Technical Service Centre:

1. Remove the cast iron top by unscrewing the two fixing screws.
2. Remove the upper closing panel of the room air duct.
3. Remove the front closing panel of the room air duct.
4. Refit the front closing panel of the room air duct in the upper position.

FOR NO REASON WHATSOEVER MUST THE APPLIANCE BE OPERATED WITH BOTH AIR PASSAGES CLOSED. DOING SO MAY DAMAGE THE APPLIANCE AND VOID THE WARRANTY.

1.

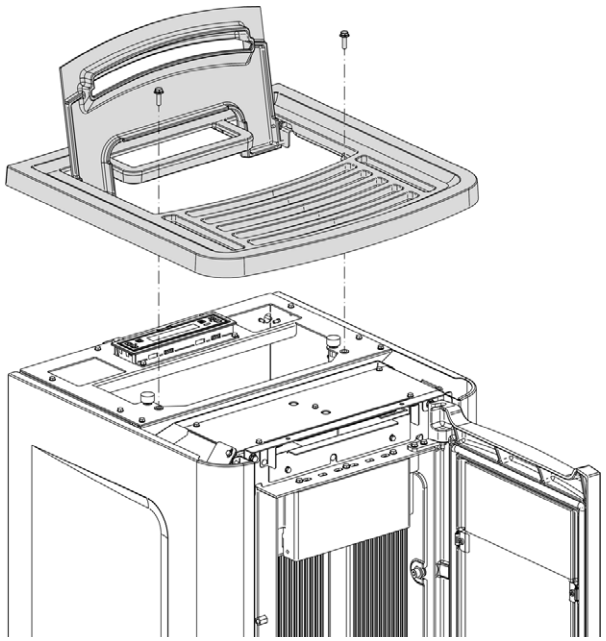

2.

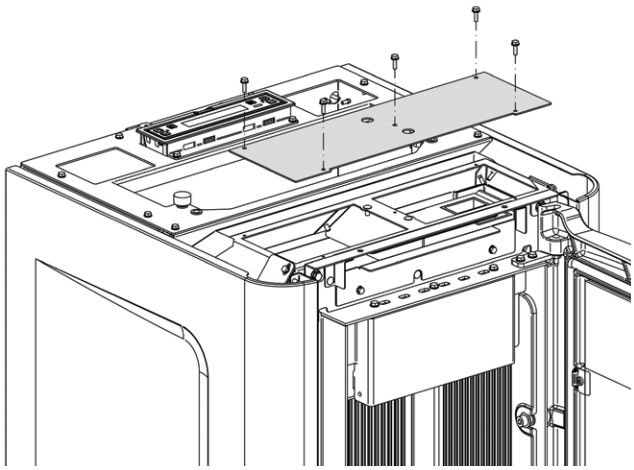

3.

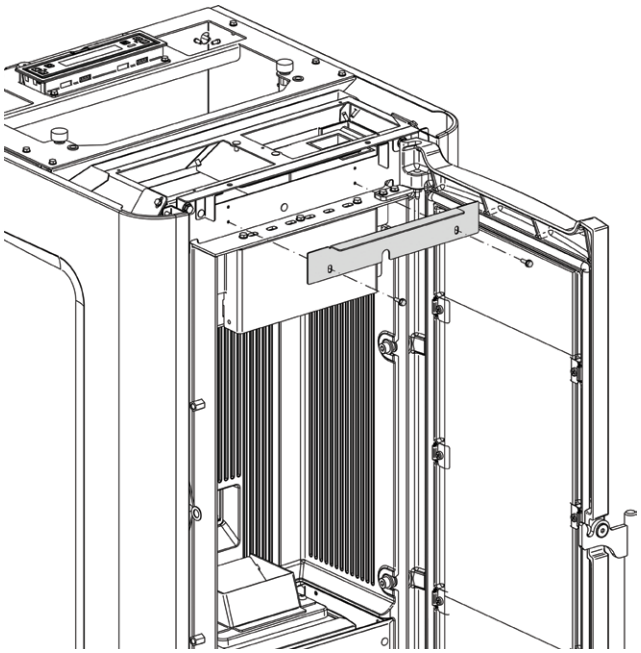

4 .

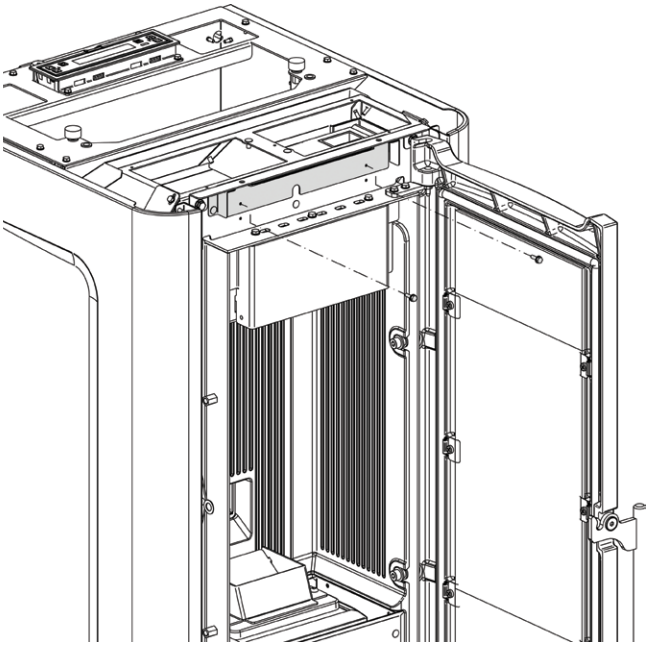

HOT AIR DUCTING (DAHIANA PLUS VFS)

The pipe used for ducting the hot air must have an internal diameter of 80 mm and it must also be insulated or at least be protected against heat dispersion.

AIR DUCTING FEATURES	
◆ Rear outlet	◆ Possibility to thermostat the ducting
◆ Diameter of air ducting outlet: 80 mm	◆ 3 possible settings: **OFF, COMFORT, AUTO**.
◆ Maximum recommended air ducting length 8 m	

THE RELEVANT HOT AIR DUCTING PIPE MUST BE INSTALLED BY QUALIFIED PERSONNEL AND/OR BY THE MANUFACTURER'S TECHNICIANS

ADDITIONAL THERMOSTAT TO CONTROL THE DUCT MOTOR

For models with duct motor, it is also possible to thermostat the motor itself. The connection to an external thermostat will allow for the duct motor to be controlled regardless of stove operation.
At this point, simply set the desired temperature on the thermostat; the thermostat will command the operation of the second motor:

- when the temperature has not been reached (contact closed) the second motor will follow the operation of the stove.
- when the temperature has been reached (contact open), the motor will switch off.

The duct thermostat terminal features a standard bridge.
See drawing to the side.

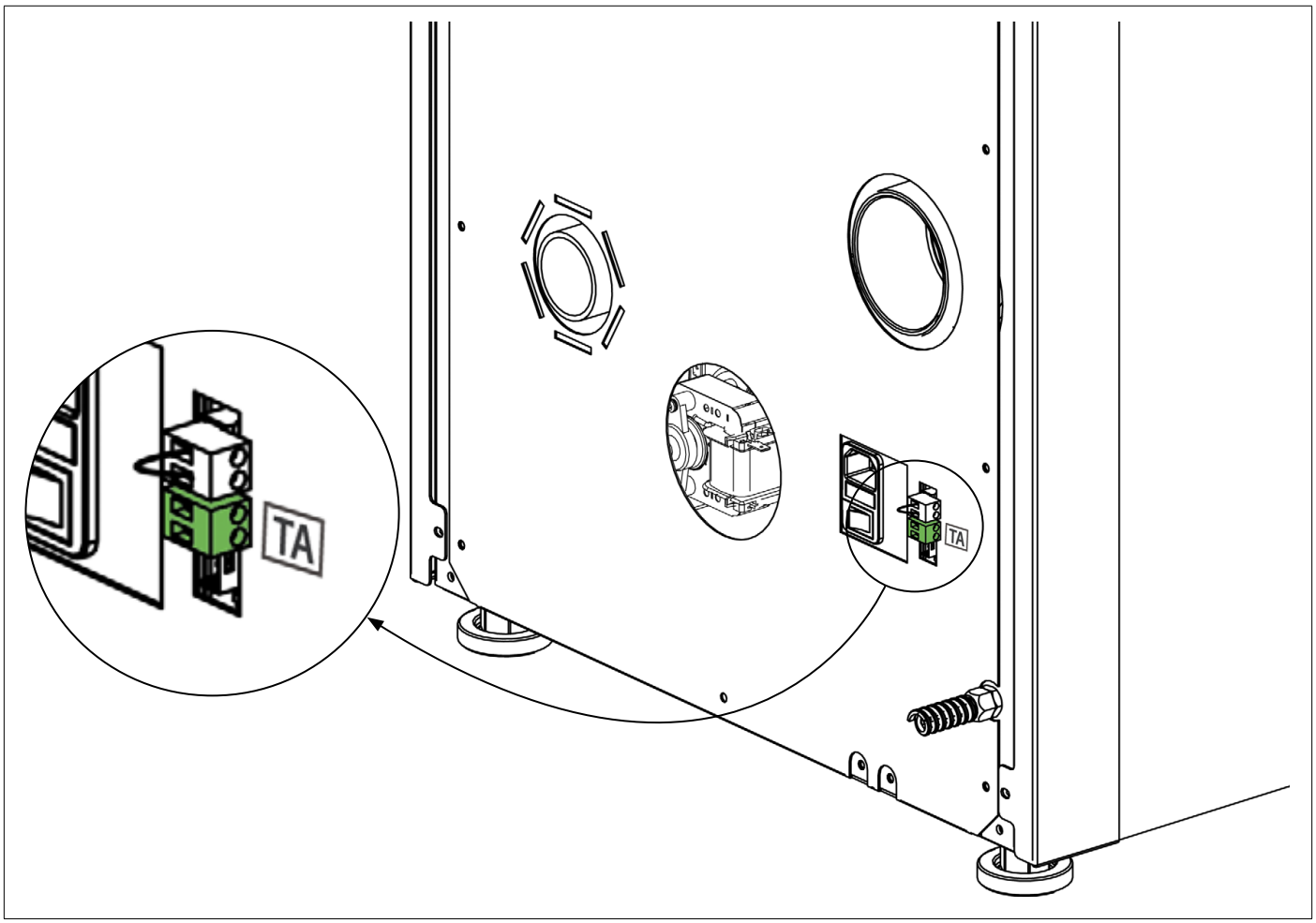

OPERATION IN AIR DUCTING WITH THERMOSTAT OR PROBE (OPTIONAL)

The stove is fitted with an independent motor for ducting. The connection of an external thermostat or temperature probe (NTC 10K) in the input, located in the rear part of the stove, makes it possible to control the air ducting motor independently of the stove.
Suffice it to connect the thermostat/temperature probe and set the desired temperature.
For information on air ducting settings see chapter:" ***MENU - DUCTING***"

WITH AMBIENT THERMOSTAT (OPTIONAL)

Remove the jumper and connect the ambient thermostat in the room that needs to be temperature-controlled through air ducting.

3 control modes:

OPERATION IN AIR DUCTING WITH AMBIENT THERMOSTAT (OPTIONAL)	
SET on **OFF** (the temperature setting is not visible)	The air ducting motor will remain off unless the fumes temperature exceeds the normal operating temperatures
SET on **AUTO** (the temperature setting is not visible)	Once the specific activation threshold has been reached and exceeded, at temperature to be satisfied (CLOSED CONTACT) the air ducting motor will follow the stove settings. When the temperature set on the thermostat is reached (OPEN CONTACT), the air ducting motor will switch **OFF** and switch on again when there is a new request.
SET on **COMFORT** (the temperature setting is not visible)	Once the specific activation threshold has been reached and exceeded, at temperature to be satisfied (CLOSED CONTACT) the air ducting motor will follow the stove settings but at a lower speed than in **SET AUTO** for increased acoustic/ambient comfort. When the temperature set on the thermostat is reached (OPEN CONTACT), the ducting motor will switch off and switch on again when there is a new request.

WITH PROBE (NTC 10K)

Remove the jumper and connect the NTC probe in the room that needs to be temperature-controlled through air ducting.

3 control modes:

OPERATION IN AIR DUCTING WITH NTC PROBE 10KΩ (OPTIONAL)	
SET on **OFF** Set the desired temperature (from 7 to 37 °C)	The air ducting motor will remain off unless the fumes temperature exceeds the normal operating temperatures
SET on **AUTO** Set the desired temperature (from 7 to 37 °C)	Once the specific activation threshold has been reached and exceeded, at temperature to be satisfied the air ducting motor will follow the stove settings. Once the temperature set in **TEMPERATURE** has been reached, the duct motor will turn **OFF** and then it will turn back on when required.
SET on **COMFORT** Set the desired temperature (from 7 to 37 °C)	Once the specific activation threshold has been reached and exceeded, at temperature to be satisfied the air ducting motor will follow the stove settings but at a lower speed than in **SET AUTO** for increased acoustic/ambient comfort. Once the temperature set in **TEMPERATURE** has been reached, the duct motor will turn OFF and then it will turn back on when required.

STOVE POSITIONING

To ensure the stove works correctly, it should always be positioned so that it is perfectly level, using a spirit level.

NOTE FOR CORRECT OPERATION

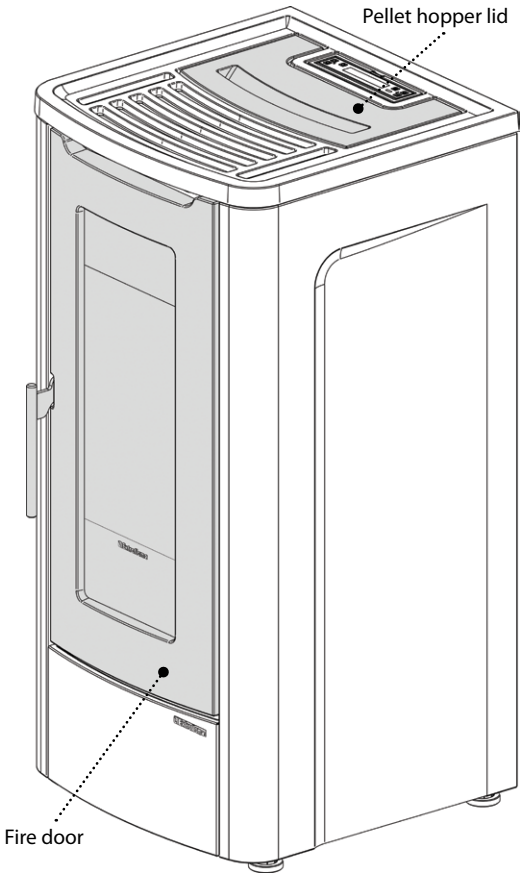

The following indications must be respected for correct pellet stove operation:

Both during stove operation and when it is not used, all hatches (pellet hopper, door, ash drawer) must remain closed at all times. They can be opened only for the time required to load the fuel and for maintenance.
Failure to comply with the above during operation will cause the display to show the following:

"**CLOSE HOPPER - STOVE DOOR**"

This indication means that you have 60 seconds to close the hatch/door and the pellet lid.

After the 60 seconds, during ignition the stove will go into "**DEPR ALARM**" mode, while during normal operation the stove will go into "**COOLING STAND BY**" mode before automatically resuming operation once the conditions are satisfied (cold stove, etc.).

BULB THERMOSTAT REACTIVATION

The figure shows the position of the hopper safety thermostat (A).
It is recommended to contact the qualified technician if one of the thermostats is triggered, so as to verify the cause.

FUSE

If the stove is not powered, have the condition of the fuse (B) checked by a qualified technician.

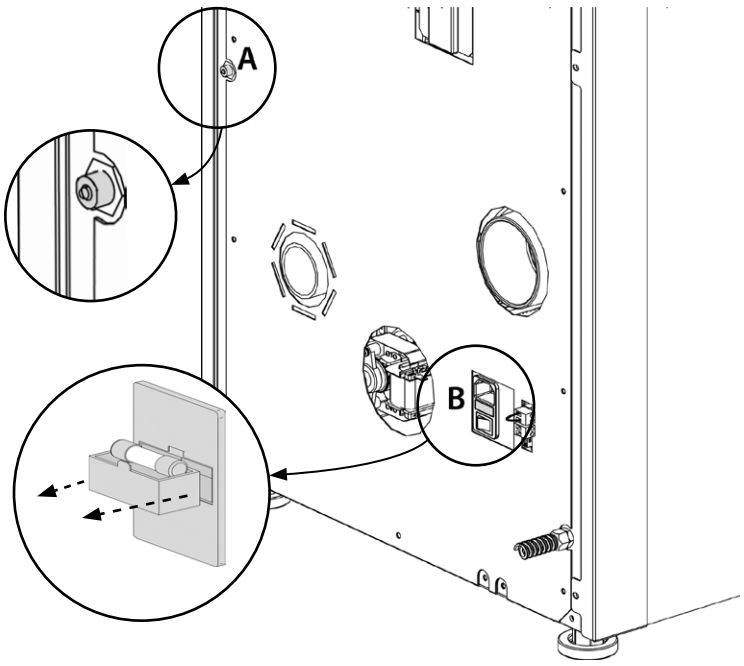

PELLETS AND LOADING

Pellets are made by subjecting wood shavings i.e. the rejects of pure unpainted wood from sawmills, carpentry products and products from other activities connected to wood working and transformation, to very high pressures.
This type of fuel is fully ecological as no glues are used for its compaction. In fact, pellet compactness is guaranteed over time by a natural substance found in wood: lignin.
In addition to being an ecological fuel, making best use of wood residue, pellets also have a series of technical advantages.
While wood has a calorific value of 4.4 kWh/kg (with 15% moisture, therefore after approximately 18 months of curing), that of pellets is 5 kWh/kg.
Pellet density is about 650 kg/m^3 and water content is equal to 8% of its weight. For this reason pellets do not need to be cured to obtain a sufficient heat yield.

The pellets used must be class **A1** certified according to standard **ISO 17225-2** (**ENplus-A1, DIN Plus** or **NF 444** of the following category: "High quality NF biocombustible wood pellets").

UNI EN 303-5 with the following characteristics: water content ≤ 12%, ash content ≤ 0.5% and lower calorific value >17 MJ/kg (in the case of boilers).

The Manufacturer recommends using pellets with a diameter of 6mm with its products.

PELLET STORAGE

To guarantee combustion without problems, the pellets must be kept in a dry place.
Open the tank lid and load the pellets using a scoop.

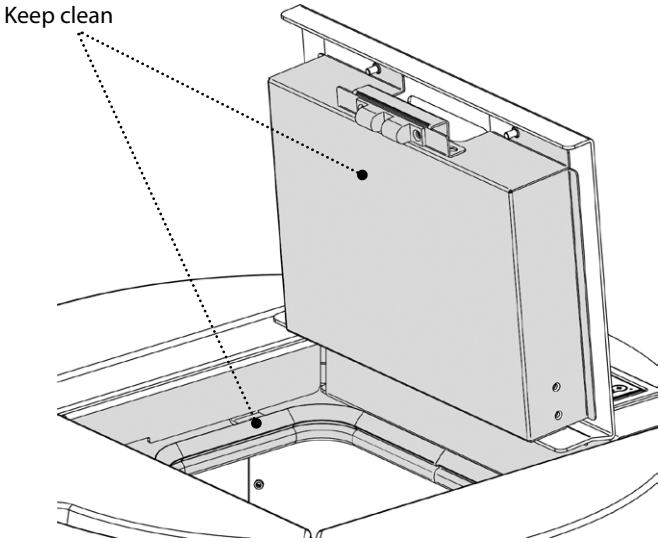

THE USE OF POOR QUALITY PELLETS OR ANY OTHER MATERIAL WILL COMPROMISE STOVE FUNCTIONS, VOIDING THE WARRANTY AND RELEASING THE MANUFACTURER OF LIABILITY.

PELLET HOPPER - PRESSURISED CLOSURE.

During stove operation, the pellet hopper lid must always be closed.

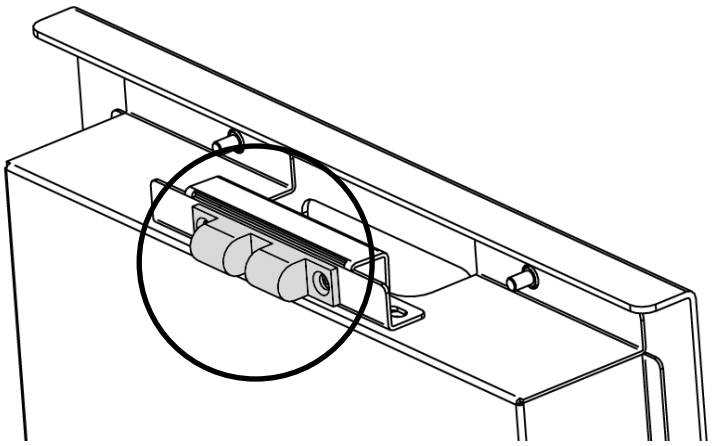

DO NOT PLACE THE BAG DIRECTLY ON THE STOVE TO LOAD THE TANK.
ALWAYS USE A SCOOP TO LOAD THE TANK. DO NOT RUB OR PLACE WEIGHTS ON THE TANK SEAL. KEEP THE TANK COVER SEAL SUPPORTING SURFACE CLEAN AT ALL TIMES. CHECK THE CONDITIONS OF THE SEAL FREQUENTLY. IF DAMAGED, CONTACT YOUR LOCAL AUTHORISED TECHNICIAN.

CONTROL BOARD

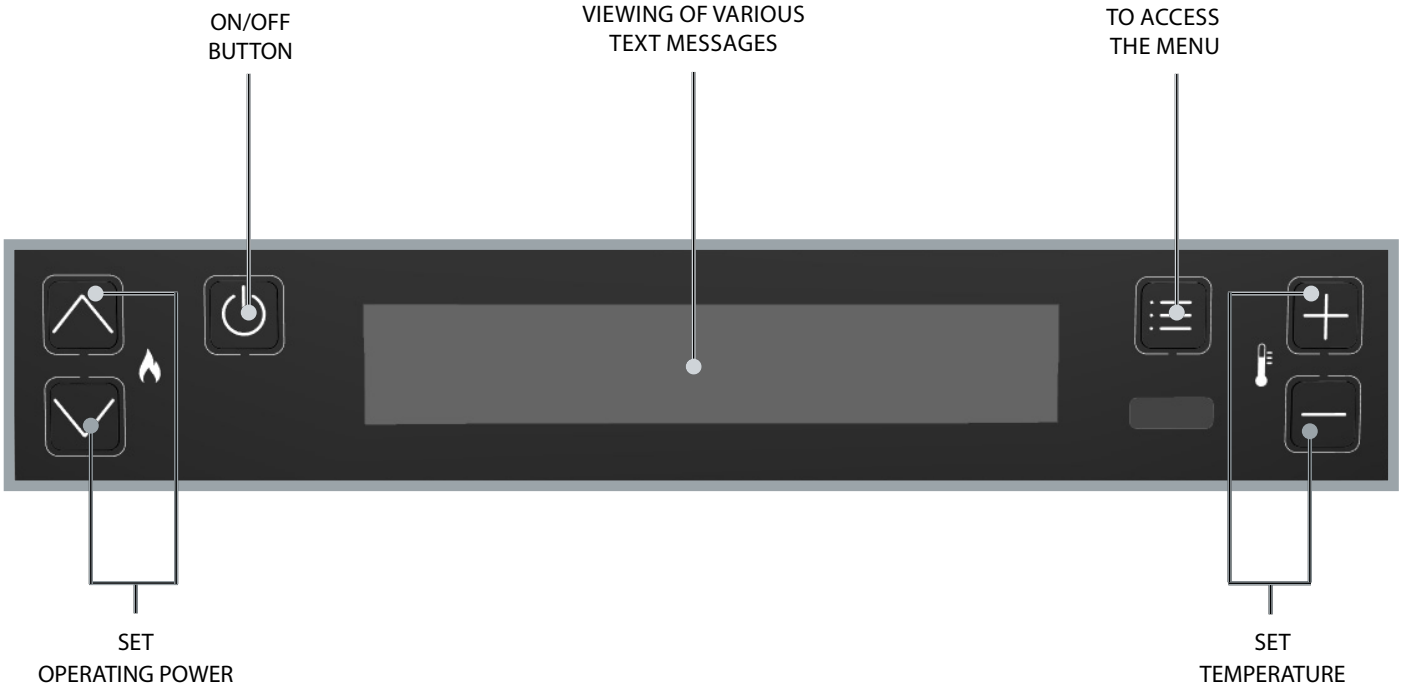

ICON KEY			
	Indicates the presence of an alarm. Off: indicates there are no alarms On: indicates the presence of an alarm		Indicates the weekly programming status Off: deactivated. On: activated.
BT	Not in use	**WI-FI**	Not in use
	Indicates contact of the external additional thermostat Closed contact: the contact of the external additional thermostat is closed. Open contact: the contact of the external additional thermostat is open. (Icon visible only if **SET THERMOSTAT** is set to "**LOW-TA**")	**STBY**	**STAND BY** function icon Off: deactivated. On: activated.
	Indicates the stove power. Flame on: stable power. Flame flashing: the power is increasing or decreasing. The dashes indicate the actual power of the machine.		Not in use.
	It indicates the operation of the tangential fan. Off = ventilation not active. On = ventilation active. Flashing = ventilation active in **COMFORT** mode		Indicates the **DELAY SWITCH-OFF** function On = delay switch-off active Off = delay switch-off not active

GENERAL MENU

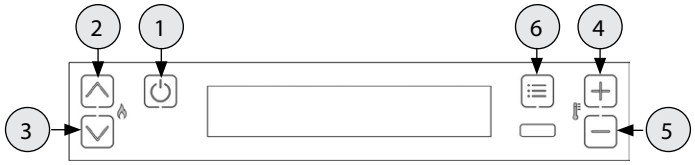

1 Go back - exit
2 3 Scroll parameters: next (3); previous (2)
4 5 Modify data settings: increase (4); decrease (5)
6 Confirm - access menu

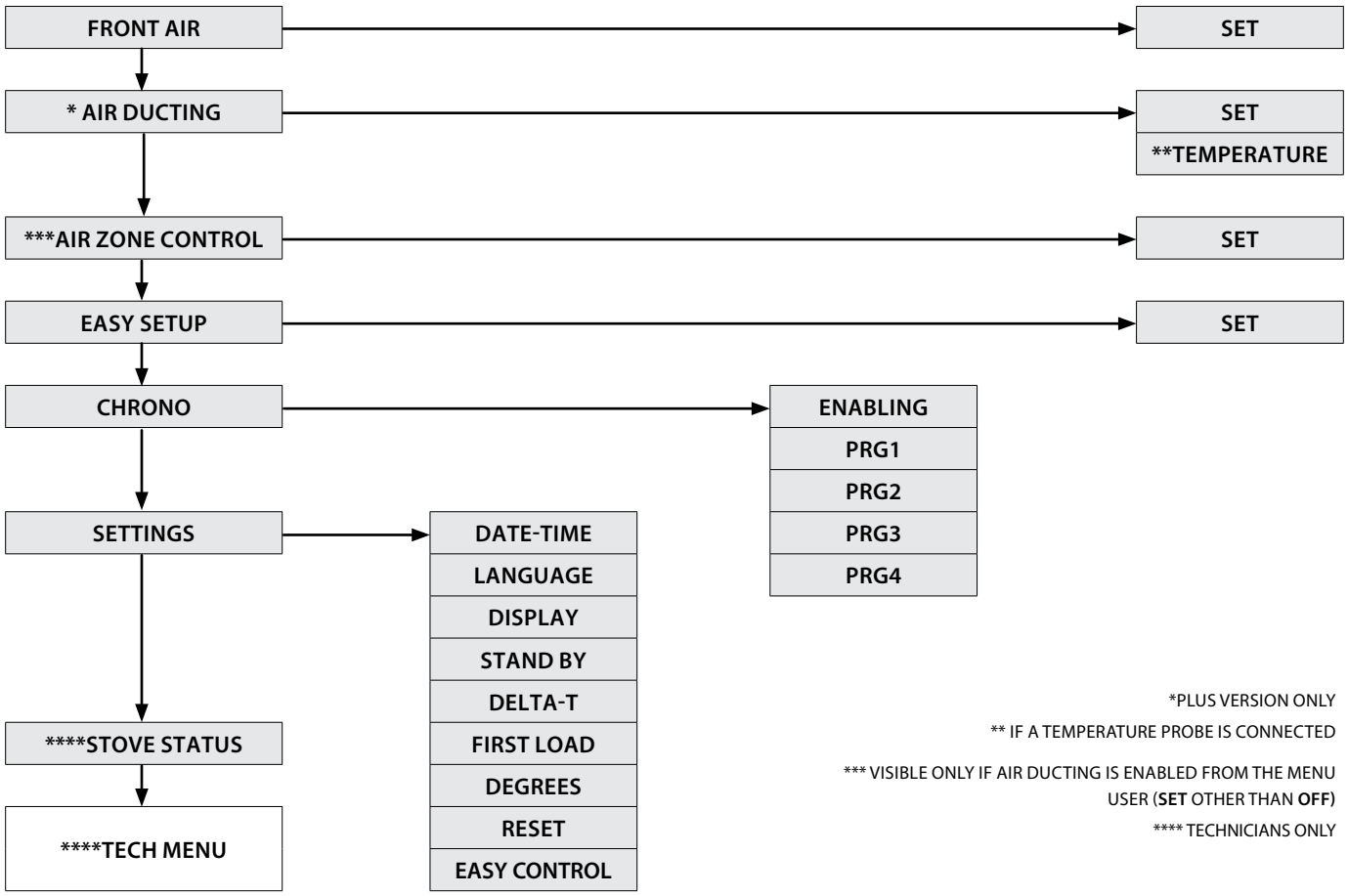

*PLUS VERSION ONLY

** IF A TEMPERATURE PROBE IS CONNECTED

*** VISIBLE ONLY IF AIR DUCTING IS ENABLED FROM THE MENU USER (**SET** OTHER THAN **OFF**)

**** TECHNICIANS ONLY

GENERAL WARNINGS

Advice to follow for the first start-ups of the product:
During the first hours of operation, there may be some smoke or odours, but they are due to the normal "thermal break-in" process. During this process, the duration of which changes depending on the product, it is recommended to:

- Ventilate the room well
- If present, remove any majolica or natural stone parts from the top of the product
- Activate the product at the maximum power and temperature
- Avoid remaining in the room for a long time
- Do not touch the surfaces of the product

Notes:
The process is completed after a few heating/cooling cycles.
Do not use for the combustion of elements or substances other than those indicated in the manual.

Before turning on the product, it is necessary to perform the following checks:

- If it is intended to be connected to a hydraulic system, it must be complete and fully functional and in compliance with the instructions given in the product manual and with the relevant regulations in force.
- The pellet hopper must be completed loaded
- The combustion chamber and the burn pot must be clean
- Make sure that the fire holder, the ash pan and the pellet hopper close hermetically (if present in the hermetic version); they must be closed and there must be no foreign bodies in the sealing elements and gaskets.
- Check that the power cord is properly connected
- The bipolar switch (if present) must be set to position "1".

MAKE SURE THAT THE BOTTOM OF THE BURN POT IS FREE FROM RESIDUE AND DEPOSITS. THE HOLES AT THE BOTTOM MUST BE COMPLETELY FREE TO GUARANTEE PROPER COMBUSTION. THE "EASY SETUP" FUNCTION CAN BE USED TO ADAPT COMBUSTION BASED ON THE DESCRIBED NEEDS.

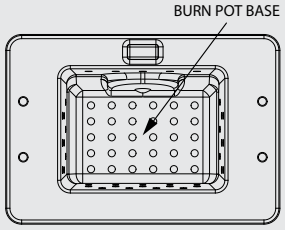

FIRST IGNITION SETTINGS

After connecting the power cord at the back of the generator, turn the switch (if any) to position (I).
The switch is used to power the heat generator board.

If the switch is in the OFF position, the generator will remain off and the word OFF will appear on the panel.

DATE-TIME

This menu allows the date and time to be set.

CONTROLS PROCEDURE
- Press key 6.
- Press key 3 until **SETTINGS** appears and confirm by pressing key 6.
- Confirm **DATE-TIME** by pressing key 6 and using keys 4 and 5 to set the day.
- Continue by pressing key 6.
- Use keys 4 or 5 to set and key 6 to advance, to regulate the day, hour, minutes, date, month, year.
- Press key 6 to confirm and key 1 to scroll back through the menus until the initial page.

LANGUAGE

This menu allows the preferred language to be selected.
The available languages are:
Italian - English - German - French - Spanish - Portuguese - Danish - Estonian - Croatian - Slovenian - Dutch - Polish - Czech.

CONTROLS PROCEDURE
- Press key 6.
- Press key 3 until **SETTINGS** appears and confirm by pressing key 6.
- Press key 3 until **LANGUAGE** appears and confirm by pressing key 6.
- Select the language using keys 4 or 5.
- Press key 6 to confirm and key 1 to scroll back through the menus until the initial page.

DEGREES

This menu allows you to set the unit of measure for the temperature. The predefined value is °C.

CONTROLS PROCEDURE
- Press key 6.
- Press key 3 until **SETTINGS** appears and confirm by pressing key 6.
- Press key 3 until **DEGREES** appears and confirm by pressing key 6.
- Use keys 4 -5 to select Celsius or Fahrenheit.
- Press key 6 to confirm and key 1 to scroll back through the menus until the initial page.

IT IS PROHIBITED TO USE THE APPLIANCE WITHOUT THE PARTITION AND/ OR FLAME GUARD (SEE FIGURE ON SIDE). REMOVAL WILL COMPROMISE THE SAFETY OF THE PRODUCT AND RESULT IN THE IMMEDIATE NULLIFICATION OF THE WARRANTY PERIOD. IN THE CASE OF WEAR OR DETERIORATION, REQUEST AFTER-SALES ASSISTANCE TO REPLACE THE PART (REPLACEMENT IS NOT COVERED BY THE WARRANTY AS THE COMPONENT IS SUBJECT TO WEAR).

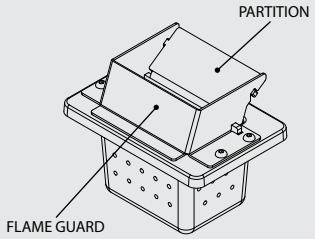

NO IGNITION

THE APPLIANCE MAY FAIL TO LIGHT BECAUSE THE AUGER IS EMPTY AND NOT ALWAYS ABLE TO LOAD THE BURN POT FAST ENOUGH WITH THE PELLETS NEEDED FOR NORMAL IGNITION. IF THE PROBLEM OCCURS AFTER ONLY A FEW MONTHS OF OPERATION, CHECK THAT THE ROUTINE CLEANING DESCRIBED IN THE STOVE HANDBOOK HAS BEEN CARRIED OUT CORRECTLY

OPERATION AND LOGIC

IGNITION

Once the previously listed points have been checked, press key 1 for three seconds to ignite the stove. During ignition, the stove will check for a flame for a period of 15 minutes. When the right temperature is reached, the stove will switch from ignition to **PREPARATION**.

PREPARATION

During the preparation phase, the stove stabilises combustion, increasing it progressively, to then start ventilation and switch to **WORK**

WORK

In the work phase, the stove switches to the Set Power defined by the user, heating the room until Set Thermostat is achieved. See next heading.

SET THERMOSTAT

The ambient Set thermostat can be set using keys 4 and 5, from **LOW-TA** - 7°C - 37°C - **HOT**. If the value is between 7°C - 37°C, the stove checks the room temperature using a probe on the machine. Once the set temperature has been reached, the stove automatically reduces the power, guaranteeing best comfort and reducing pellet consumption: this process is called "modulation".

LOW-TA / HOT

If the Set Thermostat is "**LOW-TA**" (set under the 7° threshold), temperature checking is entrusted to the additional thermostat contact, thus bypassing the on-board temperature probe.
If the contact is closed (request), the stove works at the set power.
If the contact is open (fulfilled), the stove works at minimum power.
If the setting is on "**HOT**" (set above 37°C), the stove only works at the set power, thus bypassing the external contact and the temperature probe.

SET POWER

Set Power has 5 operating levels. The power can be changed with keys 2 or 3.
Power 1 = minimum level - Power 5 = maximum level.
Press key 1 to exit and save the change.

AUTO BLOW

During the work phase, the stove cleans the burn pot at regular intervals with an "**AUTO BLOW**".
When this procedure starts, a message is displayed. During the "**AUTO BLOW**" procedure, the pellet feed slow down and the fumes motor increases.
After cleaning, the stove resumes operation in normal conditions.

SWITCH-OFF

Press key 1 for three seconds.
Once this operation has been performed, the appliance automatically enters the switch-off phase, blocking the supply of pellets.
The flue gas exhaust motor and the hot air flow motor will remain on until the stove temperature has dropped below the safety settings.

REIGNITION

The stove can only be re-ignited if the temperature of the exhaust fumes is lower than the preset threshold and the minimum safety time has passed.

DO NOT USE ANY FLAMMABLE LIQUIDS FOR IGNITION!
DO NOT ALLOW THE BAG OF PELLETS TO COME INTO CONTACT WITH THE BOILING HOT STOVE DURING THE FILLING PHASE!
IN THE EVENT OF CONTINUED FAILURE TO LIGHT, CONTACT AN AUTHORISED TECHNICIAN.

FRONT AIR

This menu allows you to set the front air motor speed. Range: (**COMFORT**, **AUTO**).
When **COMFORT** mode is selected, the front air speed is reduced with respect to **AUTO** mode.
The front air is normally excluded when the product is set to minimum power, once the appropriate temperature conditions have been guaranteed.

CONTROLS PROCEDURE
- Press key 6.
- Confirm **FRONT AIR** by pressing key 6.
- Use keys 4-5 to set the desired mode.
- Press key 6 to confirm and key 1 to scroll back through the menus until the initial page.

AIR DUCTING (DAHIANA PLUS VFS ONLY)

This menu allows you to set the ducting motor speed. Range: (**OFF**, **COMFORT**, **AUTO**).
When **COMFORT** mode is selected, the front air speed is reduced. When **OFF** mode is selected, the ventilation will turn off if the temperature of the fumes is within certain limits.

SET CONTROLS PROCEDURE
- Press key 6.
- Press 3 until **AIR DUCTING** appears and confirm by pressing 6.
- Use keys 4-5 to set the desired mode.
- Press key 6 to confirm and key 1 to scroll back through the menus until the initial page.

By connecting an external NTC probe to the input, it is possible to adjust the **TEMPERATURE**.

TEMPERATURE CONTROLS PROCEDURE

- Press key 6.
- Press 3 until **AIR DUCTING** appears and confirm by pressing 6.
- Press 3 until **TEMPERATURE** appears and confirm by pressing 6.
- Use keys 4-5 to set the desired mode.
- Press 6 to confirm or 1 to return to the previous menu to the initial state.

AIR ZONE CONTROL (DAHIANA PLUS VFS ONLY)

This menu allows you to enable the **AIR ZONE CONTROL** mode. Range: (ON, OFF)
It can be enabled only with air ducting in **AUTO** or **COMFORT**.
If ON is selected, the stove will optimise the adjustment so that the heat is sent to the air ducting when the main room temperature set is reached.

CONTROLS PROCEDURE
- Press key 6.
- Press 3 until **AIR ZONE CONTROL** appears and confirm by pressing 6.
- Use keys 4 -5 to enable (**ON**) or disable (**OFF**)
- Press key 6 to confirm and key 1 to scroll back through the menus until the initial page.

When the function is active, **AIR ZONE CONTROL** appears on the display

WARNINGS: If the appliance is installed with air ducting active, but ambient probe or thermostat for air ducting (i.e. the jumper is kept on the ducting terminal), and the AIR ZONE CONTROL function is activated, it sends heat into the ducting regardless of the temperature of the room receiving the ducting.

EASY SETUP

The volumetric weight of the pellet is the ratio between the weight and the volume of the pellet. This ratio may change without altering pellet quality. By using the **EASY SETUP** function, it is possible to dose the pellets by increasing or decreasing the preset values.

In the stove program, the available values range from "– 3" to "+ 3"; all stoves are calibrated during production with the optimal value, which is 0.
If you notice an excessive deposit in the burn pot, access the **EASY SETUP** program and lower the value by one unit to "- 1"; then wait until the next day and if there is no improvement, decrease again, to a maximum of "- 3".

If, on the other hand, it is necessary to increase the pellet dosage, switch the factory value from "0" to "+ 1, + 2, + 3" as required.

EXCESSIVE PELLET DEPOSIT IN BURN POT			NORMAL OPERATION	MINIMUM PELLET DEPOSIT IN BURN POT		
-3	-2	-1	0	+1	+2	+3
THIRD DECREASE RANGE IF THE FIRST TWO ARE INSUFFICIENT	SECOND DECREASE RANGE IF THE FIRST IS INSUFFICIENT	FIRST DECREASE RANGE (TEST FOR 1 DAY)	OPTIMAL FACTORY VALUE	FIRST INCREASE RANGE	SECOND INCREASE RANGE IF THE FIRST IS INSUFFICIENT	THIRD INCREASE RANGE IF THE FIRST TWO ARE INSUFFICIENT

CONTROLS PROCEDURE
- Press key 6.
- Press key 3 until **EASY SETUP** appears and confirm by pressing key 6.
- Use keys 4 -5 to set the range.
- Press key 6 to confirm and key 1 to scroll back through the menus until the initial page.

N.B.: IF THESE ADJUSTMENTS DO NOT SOLVE THE PROBLEM OF PELLET DEPOSITS IN THE BURN POT, PLEASE CONTACT YOUR LOCAL SERVICE CENTRE.

CHRONO

This function allows stove ignition and switch-off to be automatically programmed.
The factory setting for **CHRONO** is off.
The chrono allows the programming of 4 time slots per day, which can be used every day of the week.
For each time slot, it is possible to set ignition and switch-off times, specific days of application, desired temperature and set power. Current day and time settings are essential for the correct operation of the Chrono.

Recommendations
Before using the chrono function, you must set the current day and time, so check that you have followed the points listed in the sub-chapter "DATE-TIME". To use the chrono function correctly, it must not only be programmed, but also enabled. The 4 time slots can be overlapped using the ignition and switch-off time settings. In this way, it is possible to create a combination of time slots with different temperatures and power levels, without changing the status of the stove.

N.B.: in the case of overlapping time slots, the stove will remain on until the last switch-off time.

ENABLING/DISABLING THE CHRONO

CONTROLS PROCEDURE
- Press key 6.
- Press 3 until **CHRONO** appears and confirm by pressing key 6.
- Confirm **ENABLING** by pressing 6.
- Use keys 4 -5 to enable (**ON**) or disable (**OFF**)
- Press key 6 to confirm and key 1 to scroll back through the menus until the initial page.

CHRONO	>	**ENABLING**	>	**PRG1**	*On/off*	*Enable/disable PRG 1*
		v		**PRG2**	*On/off*	*Enable/disable PRG 2*
		v		**PRG3**	*On/off*	*Enable/disable PRG 3*
		v		**PRG4**	*On/off*	*Enable/disable PRG 4*
		PRG1	>	**START PRG1**	*OFF-00:00*	*Ignition time PRG1*
		v		**STOP PRG1**	*OFF-00:00*	*Switch-off time PRG1*
		v		**MONDAY...SUNDAY**	*On/off*	*Enable/disable days PRG1*
		v		**SET PRG1**	*LOW-TA - 07- 37 °C - HOT*	*Set thermostat PRG1*
		v		**POWER PRG1**	*1-5*	*Set power PRG1*
		PRG2	>	**START PRG2**	*OFF-00:00*	*Ignition time PRG2*
		v		**STOP PRG2**	*OFF-00:00*	*Switch-off time PRG2*
		v		**MONDAY...SUNDAY**	*On/off*	*Enable/disable days PRG2*
		v		**SET PRG2**	*LOW-TA - 07- 37 °C - HOT*	*Set thermostat PRG2*
		v		**POWER PRG2**	*1-5*	*Set power PRG2*
		PRG3	>	**START PRG3**	*OFF-00:00*	*Ignition time PRG3*
		v		**STOP PRG3**	*OFF-00:00*	*Switch-off time PRG3*
		v		**MONDAY...SUNDAY**	*On/off*	*Enable/disable days PRG3*
		v		**SET PRG3**	*LOW-TA - 07- 37 °C - HOT*	*Set thermostat PRG3*
		v		**POWER PRG3**	*1-5*	*Set power PRG3*
		PRG4	>	**START PRG4**	*OFF-00:00*	*Ignition time PRG4*
				STOP PRG4	*OFF-00:00*	*Switch-off time PRG4*
				MONDAY...SUNDAY	*On/off*	*Enable/disable days PRG4*
				SET PRG4	*LOW-TA - 07- 37 °C - HOT*	*Set thermostat PRG4*
				POWER PRG4	*1-5*	*Set power PRG4*

IF THE WEEKLY CHRONO IS ACTIVE ON THE CONTROL PANEL, A SMALL ICON IS DISPLAYED

EXAMPLE OF CHRONO OVERLAPPING TIMES/SLOTS

TIME SLOT

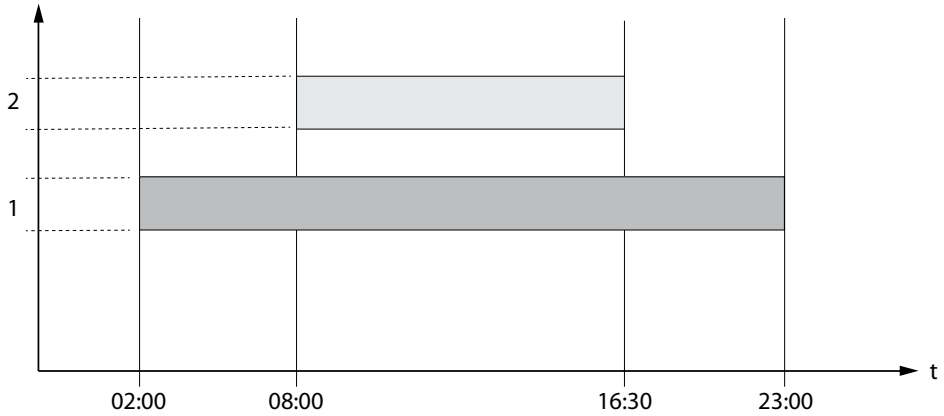

SET POWER

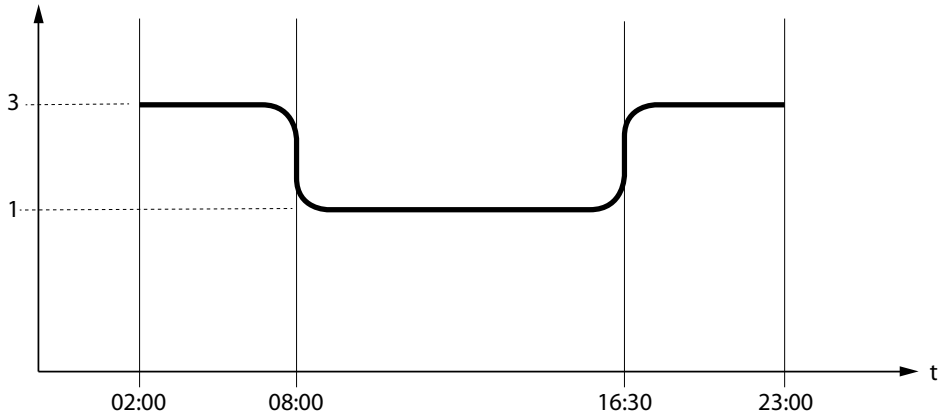

SET THERMOSTAT

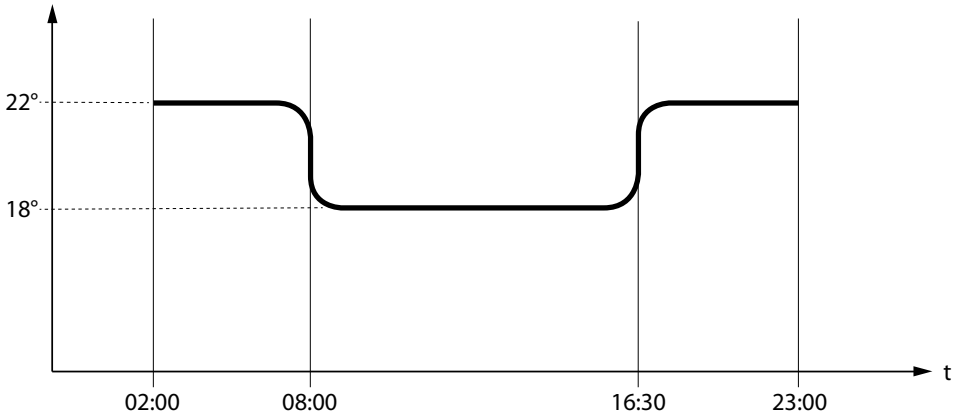

	Time slot 1	start 02:00 stop 23:00	power 3 - **SET THERMOSTAT** 22°C
	Time slot 2	start 08:00 stop 16:30	power 1 - **SET THERMOSTAT** 18°C
	stove operation		

SETTINGS

- **DATE-TIME**
- **LANGUAGE**
- **DEGREES**

SEE CHAPTER: FIRST IGNITION SETTINGS

DISPLAY

This menu allows you to adjust the brightness of the display. The values range from OFF, 1 to 20. If set to OFF, the display backlighting is set to maximum brightness and turns off after a 60 second delay.
The backlighting can be turned on again by pressing any key or if the stove is in alarm status.

CONTROLS PROCEDURE
- Press key 6.
- Press key 3 until **SETTINGS** appears and confirm by pressing key 6.
- Keep pressing key 3 until **DISPLAY** appears and confirm by pressing key 6.
- Use keys 4-5 to set the desired intensity.
- Press key 6 to confirm and key 1 to scroll back through the menus until the initial page.

STAND BY

The **STAND BY** function, if enabled, is used when stove switch-off is to be controlled by means of an additional thermostat

CONTROLS PROCEDURE
- Press key 6.
- Press key 3 until **SETTINGS** appears and confirm by pressing key 6.
- Keep pressing key 3 until **STAND BY** appears and confirm by pressing key 6.
- Use keys 4-5 to enable (**ON**) / disable (**OFF**).
- Press key 6 to confirm and key 1 to scroll back through the menus until the initial page.

STAND BY FUNCTION ON

If the STAND-BY function is active (ON), if the room temperature exceeds the value of the **SET THERMOSTAT** + **DELTA T OFF**, then the stove will switch off after a preset delay, displaying **STAND BY**.
When the room temperature is lower than the **SET THERMOSTAT** - **DELTA T ON** and after a possible cooling time, the stove switches back on.

STAND BY FUNCTION OFF (FACTORY SETTING)

If the STAND-BY function is not active (OFF), if the stove exceeds the set room temperature it will switch to the minimum value, modulating and displaying **MODULATION**. When the room temperature is lower than the **SET THERMOSTAT** the stove goes back to operating at the set power, displaying **WORK**.

OPERATION WITH ADDITIONAL THERMOSTAT (OPTIONAL)

STAND BY FUNCTION OFF (FACTORY SETTING)

If the STAND-BY function is not active (OFF), if the stove exceeds the room temperature set on the additional thermostat (contact open) it will switch to the minimum value, displaying **MODULATION**. When the room temperature is lower than the value set on the additional thermostat (contact closed), the stove goes back to operating at the set power, displaying **WORK**.

STAND BY FUNCTION ON

When the STAND-BY function is active (ON), when the room temperature set on the additional thermostat has been reached (contact open), the stove will switch off after a preset delay, displaying **STAND BY**.
When the room temperature is lower than the value set on the additional thermostat (contact closed) and after a possible cooling time, the stove switches back on.

WHEN STAND BY AND AIR ZONE CONTROL ARE ACTIVE, THE GENERATOR IS SWITCHED OFF ONLY IF BOTH ROOMS (INSTALLATION, DUCTING) REACH THE SET TEMPERATURE.

FOR CORRECT OPERATION, THE SET THERMOSTAT MUST BE SET TO LOW-TA.
> SEE CHAPTER ON ADDITIONAL THERMOSTAT SETTINGS

ADDITIONAL THERMOSTAT

N.B. : INSTALLATION MUST BE PERFORMED BY AN AUTHORISED TECHNICIAN

It is possible to control the temperature of a room adjacent to the room where the stove is positioned; simply connect a thermostat following the procedure described in the following section (it is advisable to place the optional mechanical thermostat at a height off the ground equal to 1.50 m). Stove operation with the external thermostat connected in the TA clamp may differ depending on whether or not the **STAND BY** function is enabled.

ADDITIONAL THERMOSTAT INSTALLATION

- Switch the appliance off using the master switch positioned on the rear of the stove.
- Remove the plug from the socket.
- Connect the two cables of the thermostat (clean contact - no 230 V!) on the terminal (TA) behind the machine.

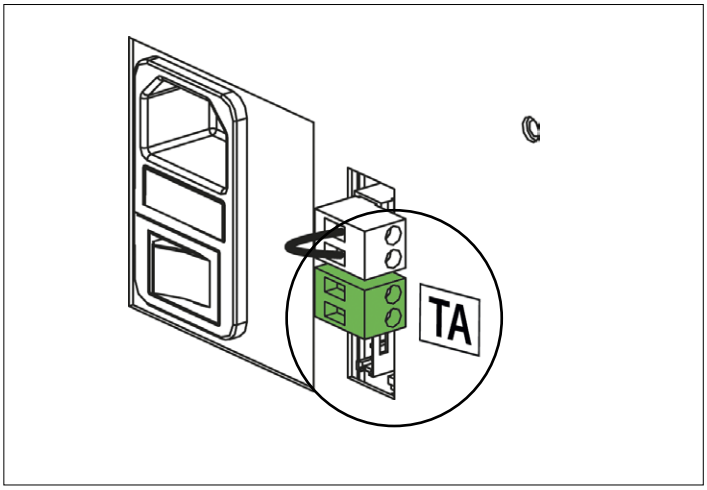

FOR CORRECT OPERATION, SET THE SET THERMOSTAT DEDICATED TO THE ROOM TEMPERATURE TO LOW-TA

DELTA-T

This function allows the hysteresis thresholds to be set for stove ignition (DELTA-T ON) and switch-off (DELTA-T OFF), used as an ambient temperature adjustment interval if not managed by an external thermostat**.**
The possible values for *DELTA T* go from: *0.5 - 5°C*

CONTROLS PROCEDURE
- Press key 6.
- Press 3 until **SETTINGS** appears and confirm by pressing 6.
- Press 3 until **DELTA T** appears and confirm by pressing 6.
- Use keys 4-5 to set the desired value.
- Press key 6 to confirm and key 1 to scroll back through the menus until the initial page.

FIRST LOAD

This function allows the auger to be filled, thus facilitating first stove ignition phases, or in the event the pellet hopper is empty. With the stove cold and "OFF", make sure the pellets have been introduced inside the hopper and activate the **FIRST LOAD** function, confirming by pressing OK.
To stop the continuous loading, simply press 1 for 3 seconds.

CONTROLS PROCEDURE
- Press key 6.
- press key 3 until **SETTINGS** appears and confirm by pressing key 6.
- Keep pressing key 3 until **FIRST LOAD** appears and confirm by pressing key 6.
- Use keys 4-5 to enable "ON" / disable "OFF"
- Press key 1 several times to confirm and exit the menu.

RESET

Allows the user to reset all editable values to the default values.

CONTROLS PROCEDURE
- Press key 6.
- Press key 3 until **SETTINGS** appears and confirm by pressing key 6.
- Press key 3 until **RESET** appears and confirm by pressing key 6.
- Use keys 4-5 to enable "ON" / disable "OFF"
- Press key 1 several times to confirm and exit the menu.

EASY CONTROL

The functions allows for two values to be set:
- **OFF** (disabled - factory default)
- **ON** (enabled)

Activation (EASY CONTROL = ON) is recommended in the event that there is an excessive formation of combustion residues in the flue during operation at reduced power (see FLUE EXHAUST chapter).

Caution! It is advisable to activate the EASY CONTROL function under the supervision of a qualified technician.

CONTROLS PROCEDURE
- Press key 6.
- Press key 3 until **SETTINGS** appears and confirm by pressing key 6.
- Keep pressing 3 until **EASY CONTROL** appears and confirm by pressing 6.
- Use keys 4-5 to enable "ON" / disable "OFF"
- Press key 1 several times to confirm and exit the menu.

ADDITIONAL FUNCTIONS

DELAYED SWITCH-OFF

You can program a delayed switch-off for the stove. For example, if it is 8pm and the delayed switch-off is set to 1h, the stove will switch off automatically at 9pm.
If you press and hold keys 2 + 4 at the same time, the screen "**DELAY SWITCH-OFF**" will appear, (this setting can only be configured if the stove is in the **PREPARATION** or **WORK** phase).
Use keys 4 and 5 to increase/decrease the number of hours after which the stove will automatically start the final cleaning phase.
The number of hours range from OFF, 1 to 9.
Press P6 to confirm and return to the home page.

If the function is active, the timer symbol will appear intermittently. 1h after the set switch-off, the remaining operating time is indicated by displaying the screen with the title "**DELAY SWITCH-OFF**" and the value "TIME xx:xx" every minute.

KEYS LOCKED

This function allows you to lock the display keys (similar to mobile phones).
With the function active, each time a key is pressed, the message "**KEYS LOCKED**" will appear

To lock the keypad, press keys 1 and 5 simultaneously until the following message appears: "**KEYS LOCKED**"
To unlock the keypad, press keys 1 and 5 simultaneously until the following message appears: "**KEYS UNLOCKED**"

TO FIND OUT WHERE YOUR NEAREST SERVICE CENTRE IS, CONTACT YOUR DEALER OR VISIT THE WEBSITE:
WWW.LANORDICA-EXTRAFLAME.COM

CLEANING AND MAINTENANCE

ALWAYS FOLLOW THE INSTRUCTIONS IN COMPLETE SAFETY!

- Make sure that the power cord is unplugged because the generator may have been programmed to switch on.
- That the generator is cold all over.
- That the ashes are completely cold.
- Ensure efficient air exchange in the room during the product cleaning operations.
- Poor cleaning will compromise correct operation and safety!

MAINTENANCE

For correct operation, the generator must undergo routine maintenance by a qualified technician, at least once a year.
The periodic inspection and maintenance operations must always be performed by specialised, qualified technicians, who operate in accordance with the laws in force and the instructions given in this use and maintenance manual.

EVERY YEAR, HAVE THE FUME EXTRACTION SYSTEM, FLUE PIPES AND "T" FITTINGS, INCLUDING THE INSPECTION CAPS CLEANED. IF PRESENT, ALSO CLEAN THE ELBOWS AND HORIZONTAL SECTIONS!
THE GENERATOR CLEANING FREQUENCY IS INDICATIVE! DEPENDS ON THE QUALITY OF THE PELLET USED AND ON HOW OFTEN IT IS USED.
THESE OPERATIONS MAY SOMETIMES NEED TO BE PERFORMED MORE OFTEN

PERIODIC CLEANING UNDER USER'S RESPONSIBILITY

The periodic cleaning operations, as indicated in this use and maintenance manual, must be performed with the utmost care after reading the instructions, procedures and frequency described in this use and maintenance manual.

CLEANING THE SURFACES AND COVERING
Never use abrasive or chemically aggressive detergents for cleaning!
The surfaces must be cleaned when the generator and coating are completely cold. For the maintenance of the surfaces and metal parts, simply use a cloth dampened with water or water and neutral soap.
Failure to follow the instructions may lead to damage to the generator surfaces and invalidate the warranty.

CLEANING THE CERAMIC GLASS
Never use abrasive or chemically aggressive detergents for cleaning!
The ceramic glass must be cleaned when the glass is completely cold.
To clean the ceramic glass, simply use a dry brush and some damp newspaper dipped in ash. If the glass is very dirty, use a specific cleaning agent for ceramic glass. Spray a small amount on a cloth and use it on the ceramic glass. Do not spray the cleaning agent or any other liquid directly on the glass or seals!

Failure to comply with these instructions may damage the surfaces of the ceramic glass and cause the invalidation of the warranty.

CLEANING THE PELLET HOPPER
When the hopper is completely empty, disconnect the power cord of the generator, remove the residues (dust, chippings, etc.) from the empty hopper and then fill it up.

THE PELLET HOPPER GASKETS, BURN POT AND FIRE DOOR GUARANTEE CORRECT STOVE OPERATION. THESE NEED TO BE PERIODICALLY CHECKED BY THE USER. IF THEY ARE WORN OR DAMAGED, REPLACE THEM IMMEDIATELY. THESE OPERATIONS MUST BE PERFORMED BY A QUALIFIED TECHNICIAN.

IF THE POWER CORD IS DAMAGED, IT MUST BE REPLACED BY THE SERVICE CENTRE OR BY A SIMILARLY QUALIFIED PERSON, SO AS TO AVOID ALL RISKS.

BURN POT AND COMBUSTION CHAMBER:

- Vacuum the residue in the burn pot
- Remove the burn pot completely from the relevant compartment;
- Vacuum the ash from the burn pot slot, ignition plug pipe holder and combustion chamber.
- Clear/clean all the holes in the burn pot.
- Re-position the burn pot in its slot and push it towards the fire wall.

NOTE: Use a suitable ash vacuum cleaner with a special separate container for the collected ashes.

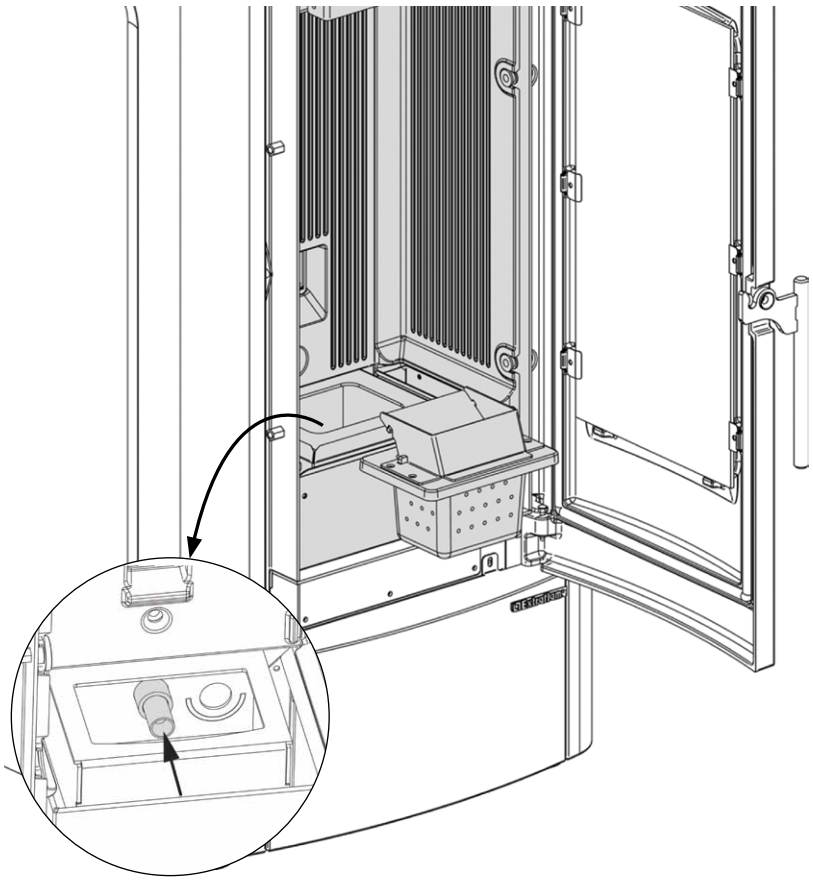

REMOVABLE ASH PAN:

- Remove the ash pan and empty it in a dedicated container.

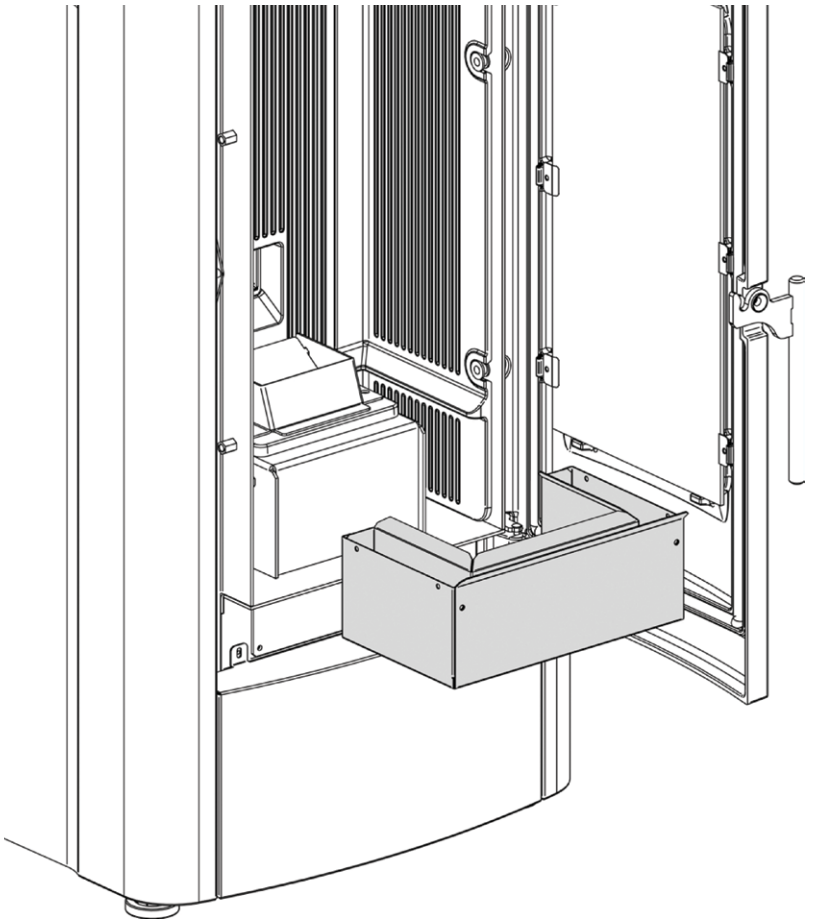

CLEANING THE *TOP PART* OF THE HEAT EXCHANGER:

- Extract and remove the deflector (**A**) from its seat
- Clean the top part of the heat exchanger (**B**) using the pipe cleaner supplied

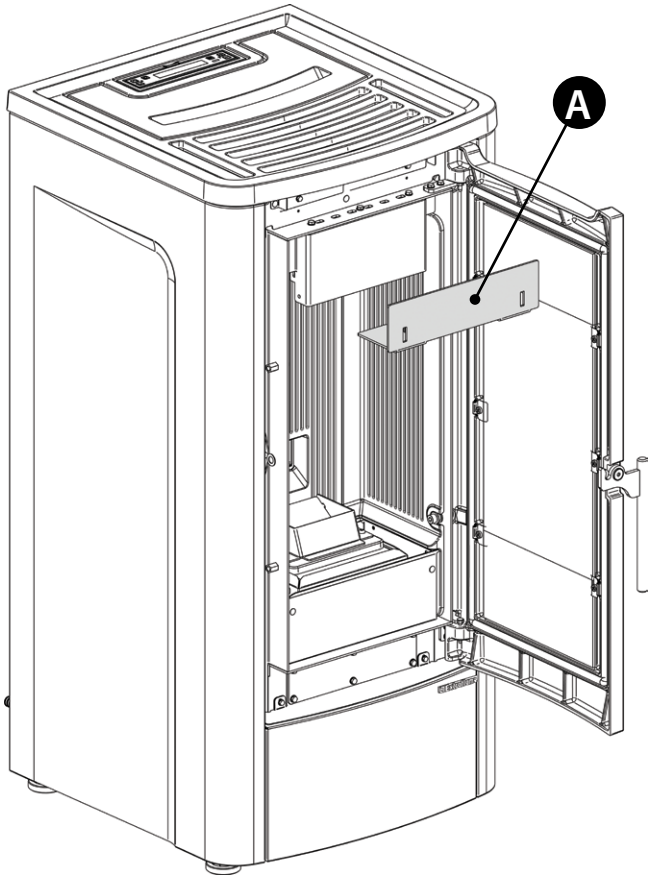

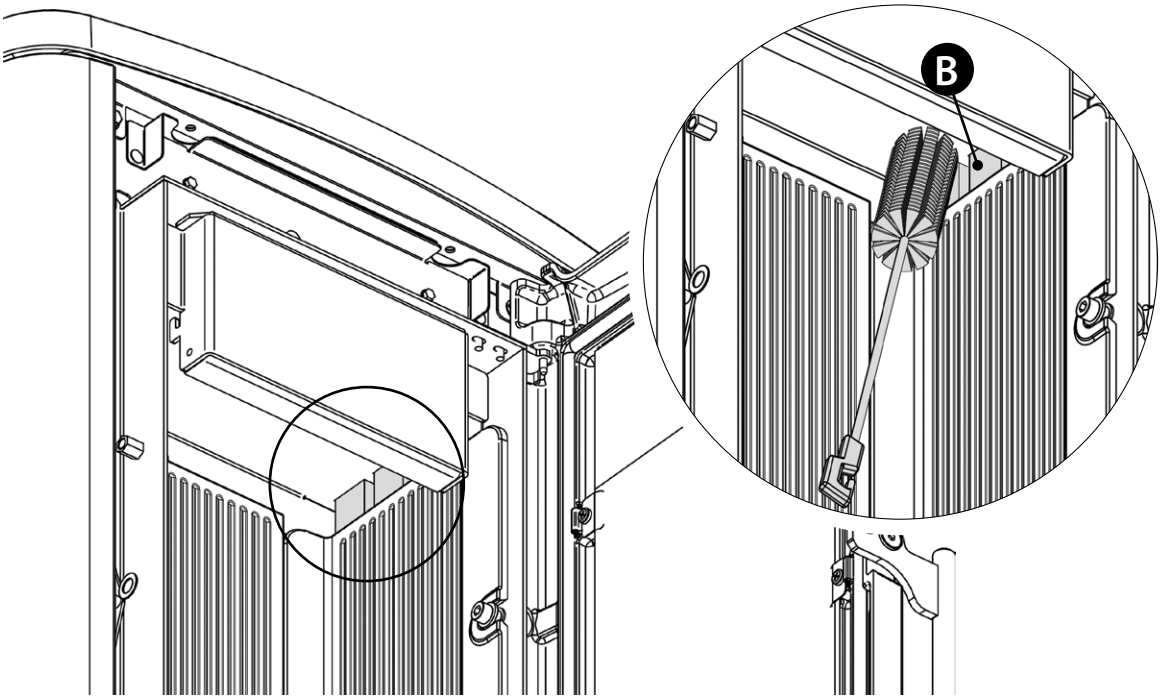

PARTIES	FREQUENCY IN DAYS*
BURN POT (USER)	3
COMBUSTION CHAMBER (USER)	7
REMOVABLE ASH PAN** (USER)	3
CLEANING THE *TOP PART* OF THE HEAT EXCHANGER (USER)	30
CLEANING THE HEAT EXCHANGER AND INSPECTION COMPARTMENT (QUALIFIED TECHNICIAN)	365
T-SHAPED FITTING / SMOKE DUCT (QUALIFIED TECHNICIAN)	365

* Average use 8h at max. nominal power

** How often the ash pan is emptied depends on a number of factors: the type of pellets, the stove output, the use of the stove and the type of installation.

A CLEAN BURN POT GUARANTEES CORRECT OPERATION!

BY KEEPING THE BURN POT AND ITS HOLES CONSTANTLY CLEAN AND FREE OF COMBUSTION RESIDUE, EXCELLENT COMBUSTION IS GUARANTEED OVER TIME, THUS PREVENTING ANY GENERATOR MALFUNCTIONS THAT MAY REQUIRE TECHNICAL ASSISTANCE.

THE "EASY SETUP" FUNCTION IN THE USER MENU CAN BE USED TO ADAPT COMBUSTION ON THE BASIS OF THE NEEDS DESCRIBED.

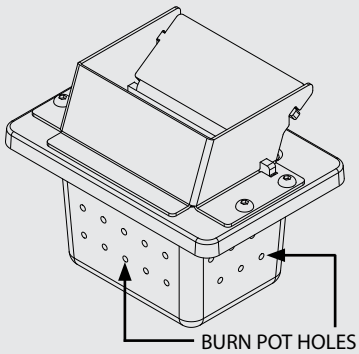

TO FIND OUT WHERE YOUR NEAREST SERVICE CENTRE IS, CONTACT YOUR DEALER OR VISIT THE WEBSITE:
WWW.LANORDICA-EXTRAFLAME.COM

ROUTINE MAINTENANCE PERFORMED BY QUALIFIED TECHNICIANS

Routine maintenance must be performed at least once a year.
Since the generator uses pellets as solid fuel, it requires annual routine maintenance, which must be performed by a **Qualified technician, using only original spare parts.**
Failure to comply may jeopardise safety of the appliance and invalidate the warranty conditions.
By observing the cleaning schedule reserved to the user described in the use and maintenance manual, the generator will be guaranteed correct combustion over time, thus preventing any faults and/or malfunctions which may require subsequent technical assistance. Requests for routine maintenance are not covered by the warranty.

GASKETS, PELLET HOPPER LID, DOOR, ASH DRAWER AND BURN POT, INSPECTION OF SMOKE DUCTS

The gaskets ensure the proper sealing of the stove and therefore its proper operation.
They must be periodically checked and immediately replaced if worn or damaged.
These operations must be carried out by a qualified technician.

CONNECTION TO THE FLUE

Annually, or in any case each time the flue pipe needs to be vacuumed and cleaned. If there are horizontal sections, the residue must be removed to prevent it from obstructing the flow of fumes.

SHUT-DOWN (END OF SEASON)

At the end of each season, before turning the stove off, it is advisable to completely empty the pellet hopper, removing any pellet residue and dust with a vacuum cleaner.
Furthermore, please disconnect the generator from the mains electricity and, for greater safety especially in the presence of children, remove the power cord.

CLEANING THE HEAT EXCHANGER AND INSPECTION COMPARTMENT

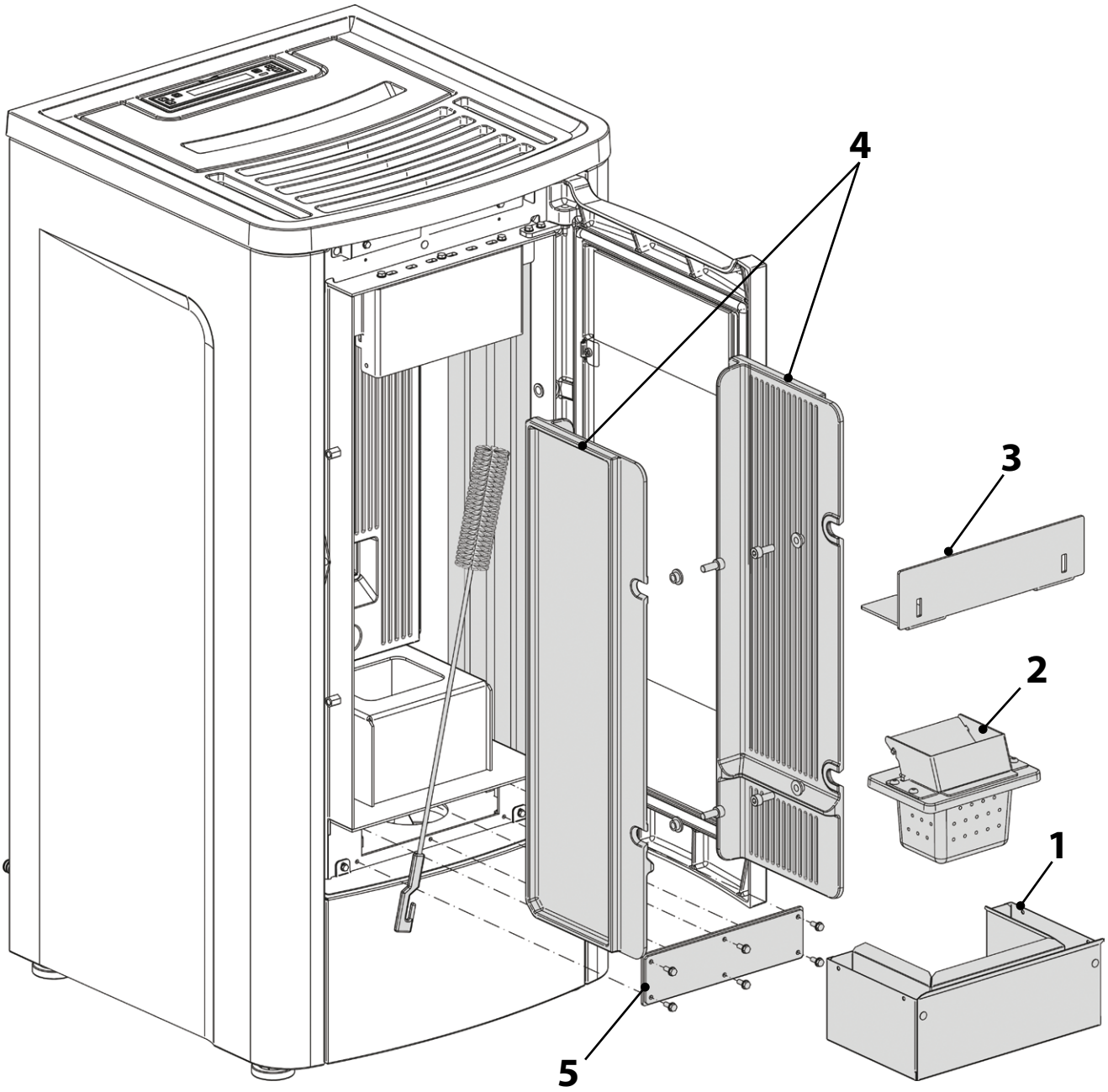

TO FIND OUT WHERE YOUR NEAREST SERVICE CENTRE IS, CONTACT YOUR DEALER OR VISIT THE WEBSITE: WWW.LANORDICA-EXTRAFLAME.COM

DAHIANA VFS - DAHIANA PLUS VFS

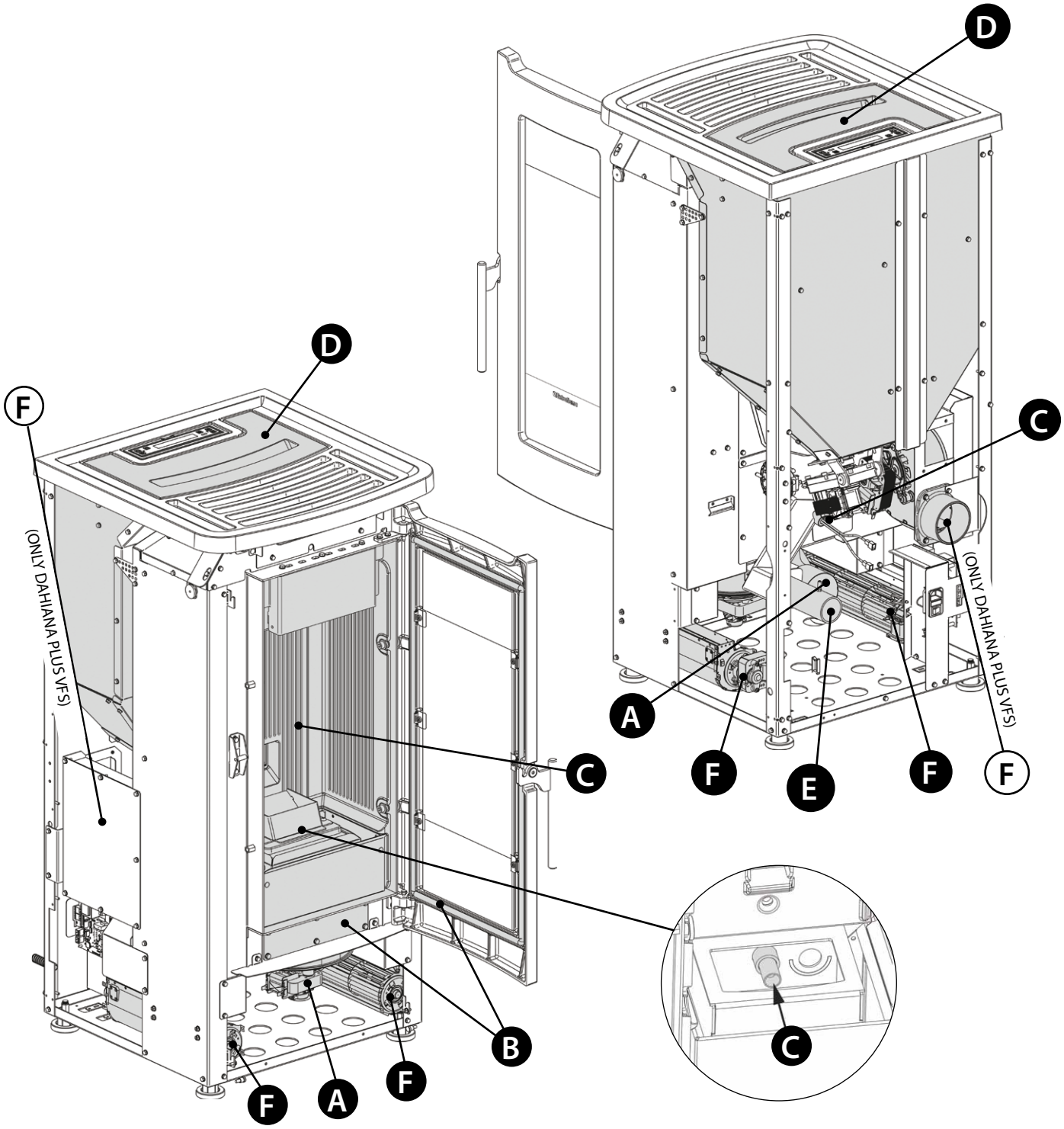

THE IMAGES ARE FOR ILLUSTRATIVE PURPOSES.

A	Fumes motor (dismantle and clean the smoke duct and "T"), new seal where required
B	Gaskets, pellet hopper, inspections, ash drawer and door (replace and apply silicone where indicated)
C	Combustion chamber and heat exchanger (full cleaning) including ignition plug pipe
D	Hopper (complete emptying and cleaning)
E	Check the air intake pipe and check/clean the mechanical pressure switch
F	Remove the ambient air fan and remove any dust and pellet residue.

DISPLAYS	
DISPLAY	**REASON**
OFF	Generator off
START	The start-up phase is in progress
PELLET LOADING	Continuous pellet loading is in progress during the ignition phase
IGNITION	The ignition phase is in progress
PREPARATION	The preparation phase is in progress
WORK	The normal work phase is in progress
MODULATION	The generator is working at minimum
FINAL CLEANING	The final cleaning is in progress
STAND BY	Generator off waiting for re-ignition due to the external thermostat.
COOLING STAND BY	A new ignition is attempted when the generator has just been switched off. When the generator switches off, you must wait for the complete shutdown of the fumes motor, then clean the burn pot. The generator can only be re-ignited when these operations have been performed.
BLACK OUT STAND BY	The generator is cooling after a power cut. Once cooling is completed, it will re-start automatically
AUTO BLOW	The automatic blow is active
CLOSE HOPPER-STOVE DOOR	This indication means that you have 60 seconds to close the hatch/door and the pellet lid. After 60 seconds have passed, the stove will enter "**DEPR ALARM**" during the ignition phase, while during normal operation, the stove will enter "**COOLING STAND BY**" and then restart automatically when the conditions are met (cold stove, etc.).
AIR ZONE CONTROL	This message, visible in the WORK phase, indicates that the appliance is optimising the distribution of hot air between the installation room and the ducted room.

ALARMS		
DISPLAY	**EXPLANATION**	**SOLUTION**
⚠	Indicates the presence of an alarm.	On: indicates the presence of an alarm The alarm can only be reset if the fumes motor has stopped and 15 minutes have passed since the alarm was displayed, by pressing key 1 for 3 seconds.
FUMES MOTOR FAULT	Fumes motor fault	Contact after-sales centre
FUMES PROBE	Fumes probe fault.	Contact after-sales centre
HOT FUMES	High fumes temperature	Check pellet loading (see "Easy setup"); if the problem is not solved, contact a service centre.
NO IGNITION	The pellet hopper is empty. Pellet feed calibration inadequate. Thermostat bulbs tripped.	Check for the presence of pellets in the hopper. Adjust the pellet flow (see "Easy setup"). Check the procedures described in the "Ignition" chapter. Check bulb thermostats (see chapter on Resetting)
NO FLAME	The pellet hopper is empty. No pellet feed. The gearmotor does not feed pellets. Thermostat bulbs tripped.	Check for the presence of pellets in the hopper. Adjust the pellet flow (see "Easy setup"). Check bulb thermostats (see chapter on Resetting)
DEPR ALARM	The door is not closed correctly. The ash drawer is not closed correctly. The combustion chamber is dirty. The fumes exhaust pipe is blocked/dirty	Check hermetic door closure. Check hermetic closure of the ash drawer. Check cleanliness of the fumes pipe and the combustion chamber.
NO IGNITION - BLACK OUT	No power during the ignition phase.	Turn the stove off using key 1 and repeat the procedure described in the "Ignition" chapter. Other reset operations should be performed by an authorised technician.
COMMAND AUGER ALARM	Abnormal pellet loading.	Contact after-sales centre

DISPOSAL

INFORMATION FOR MANAGEMENT OF ELECTRIC AND ELECTRONIC APPLIANCE WASTE CONTAINING BATTERIES OR ACCUMULATORS

This symbol, which is used on the product, batteries, accumulators or on the packaging or documents, means that at the end of its useful life, this product, the batteries and the accumulators included must not be collected, recycled or disposed of together with domestic waste.
Improper management of electric or electronic waste or batteries or accumulators can lead to the leakage of hazardous substances contained in the product. For the purpose of preventing damage to health or the environment, users are kindly asked to separate this equipment and/or batteries or accumulators included from other types of waste and to arrange for disposal by the municipal waste service It is possible to ask your local dealer to collect the waste electric or electronic appliance under the conditions and following the methods provided by national laws transposing the Directive 2012/19/EU.

Separate waste collection and recycling of unused electric and electronic equipment, batteries and accumulators helps to save natural resources and to guarantee that this waste is processed in a manner that is safe for health and the environment.
For more information about how to collect electric and electronic equipment and appliances, batteries and accumulators, please contact your local Council or Public Authority competent to issue the relevant permits.

Extraflame®

Riscaldamento a Pellet

EXTRAFLAME S.p.A. Via Dell'Artigianato, 12 36030 - MONTECCHIO PRECALCINO (VI) - ITALY
☏ +39.0445.865911 - 🖷 +39.0445.865912 - ✉ info@extraflame.it - 💻 www.lanordica-extraflame.com

MADE IN ITALY
design & production

TO FIND THE SERVICE CENTRE NEAREST TO YOU CONTACT YOUR DEALER OR CONSULT THE SITE WWW.LANORDICA-EXTRAFLAME.COM

The manufacturer reserves the right to vary the characteristics and the data reported in this pamphlet at any moment and without notice, in order to improve its products.